EPSON
EXCEED YOUR VISION

# EB-685W/EB-675W/EB-680/EB-670

# Installation Guide

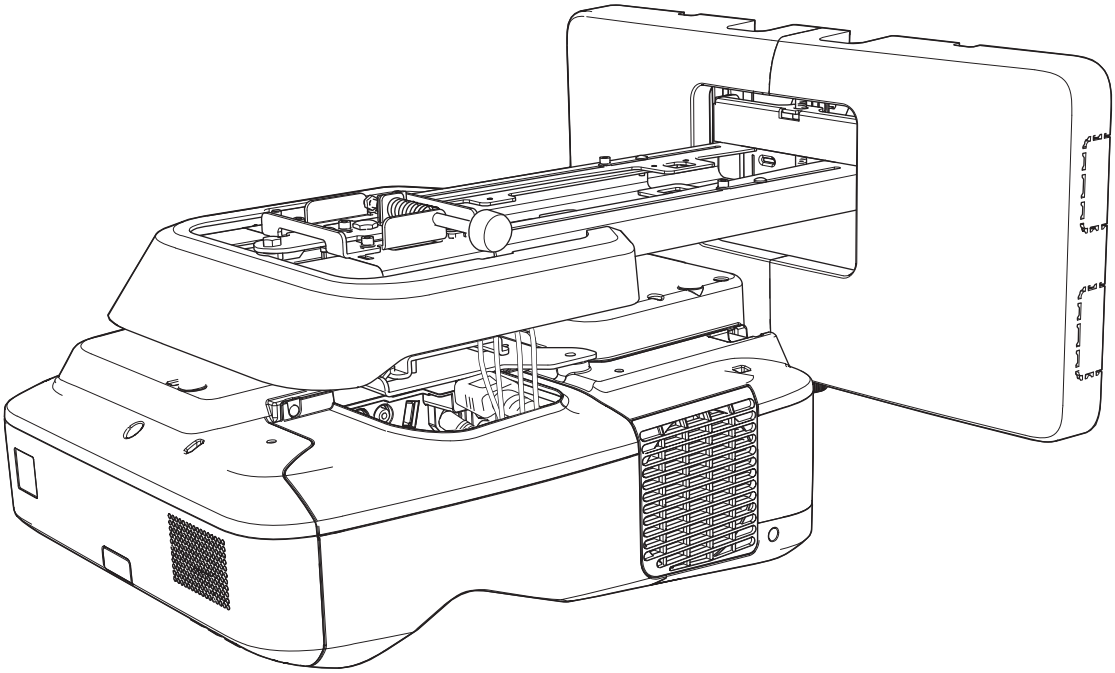

# Safety Instructions

For your safety, read all the instructions in this guide before using this product. Incorrect handling that ignores instructions in this guide could damage this product or could result in personal injury or property damage. Keep this installation guide at hand for future reference.

Read the *User's Guide* and *Safety Instructions* for your projector and follow the instructions in these documents.

## Safety indications

The documentation and this product use graphical symbols to show how to use this product safely.

The indications and their meaning are as follows. Make sure you understand them properly before reading the guide.

| Symbol | Explanation |
|---|---|
| Warning | This symbol indicates information that, if ignored, could possibly result in personal injury or even death due to incorrect handling. |
| Caution | This symbol indicates information that, if ignored, could possibly result in personal injury or physical damage due to incorrect handling. |

## Explanation of Symbols

| Symbols | Explanation |
|---|---|
| | Symbol indicating an action that must not be done |
| | Symbol indicating an action that should be done |
| | Symbol indicating related or useful information |

## Safety Precautions for Installation

| Warning | |
|---|---|
| The setting plate is exclusively for mounting the projector on a wall. If anything other than a projector is mounted, the weight may result in damage.<br>If this product falls, it could cause death or personal injury. | |
| The installation work (wall mounting) should be performed by specialists who have technical knowledge and ability. Incomplete or incorrect installation could cause the product to fall and cause personal injury or property damage. | |
| Follow the instructions in this guide when installing this product.<br>If the instructions are not followed, this product may fall, resulting in personal injury or an accident. | |

| Warning | |
|---|---|
| Handle the power cord carefully.<br>Incorrect handling may cause fire or electric shock. Observe the following precautions when handling:<br>• Do not handle the power plug with wet hands.<br>• Do not use a power cord that is damaged or modified.<br>• Do not pull the power cord with too much force when routing the cable through the setting plate. | |
| Do not install the setting plate in a place where it might be subjected to vibration or shock.<br>This could cause damage to the projector or mounting surface. If this product falls, it could cause death or personal injury. | |
| Install the setting plate so that it can sufficiently support the mass of the projector and setting plate, and resist any horizontal vibration. Use M10 nuts and bolts.<br>Nuts and bolts smaller than M10 could cause the setting plate to fall. Epson accepts no responsibility for any damage or injury caused by lack of wall strength or inadequate installation. | |
| The installation work should be performed by at least two qualified service personnel. If you need to loosen any screws during installation, be careful not to drop this product.<br>If this product falls, it could cause death or personal injury. | |
| When mounting this product on a wall, the wall requires enough strength to hold the projector and the setting plate.<br>This product should be installed on a concrete wall. The maximum combined weight of the projector and the setting plate is approximately 13.5 kg (not including cables). Ensure the strength of the wall before mounting this product on the wall. If the wall is not strong enough, reinforce the wall before installation. | |
| Inspect the setting plate on a regular basis to ensure there are no broken parts or loose screws.<br>If any parts are damaged, stop using the setting plate immediately. If this product falls, it could cause death or personal injury. | |
| Do not disassemble or remodel this product.<br>There are numerous high-voltage sections inside the product that could cause a fire, electric shock, or an accident. | |
| Do not hang on this product or hang a heavy object on this product.<br>If this product falls, it could cause death or personal injury. | |
| Do not use adhesives, lubricants, or oils to install or adjust the setting plate.<br>If you use adhesives to prevent the screws from loosening or things such as lubricants or oils on the slide plate fixing part of the projector, the case may crack and cause the projector to fall, resulting in personal injury or property damage. | |
| Tighten all screws firmly after adjustment.<br>Otherwise, the product may fall and cause personal injury or property damage. | |
| Never loosen the bolts and nuts after installation.<br>Confirm that the screws have not become loose on a regular basis. If you find any loose screws, tighten them firmly. Otherwise, the product may fall and cause personal injury or property damage. | |
| Route the cables so that they are not interfered with the nuts and bolts.<br>Incorrect handling of the cables may cause fire or electric shock. | |

| Warning | |
|---|---|
| When turning on the projector, do not look into the projection window.<br>This could cause damage to eyesight due to the powerful light emitted. Take particular care when there are children present. When turning on the projector at a distance using the remote control, make sure there is no one looking into the projection window. | |
| When using the projector, do not place any objects or put your hand near the projection window.<br>This area is dangerous as it reaches a high temperature due to the concentrated projection light. | |
| Do not cover the projector's air intake vent or air exhaust vent. If either of the vents are covered, the internal temperature could rise and cause a fire.<br>Avoid locations subject to high temperatures, such as close to heaters, and leave a gap of at least 50 cm between the wall and the air exhaust vent. | |
| Do not use the projector in a location subject to combustible or explosive gas.<br>The projector may catch fire because of the high temperature of the lamp inside the projector. | |
| If any abnormalities occur with this product, immediately disconnect the cables from the product, and then contact your local dealer or the nearest Epson service call center.<br>Continuing to use the product in an abnormal condition could cause a fire, electric shock, or visual impairment. | |

| Caution | |
|---|---|
| Do not install this product in a location where the operating temperature for your projector model may be exceeded.<br>Such an environment may damage the projector. | |
| Install this product in a place free from excessive dust and humidity to prevent the lens or optical components from becoming dirty. | |
| Do not use excessive force when adjusting this product.<br>This product may break, resulting in personal injury. | |

## About This Installation Guide

This guide describes how to mount the ultra short-throw projector EB-685W/EB-675W/EB-680/EB-670 on a wall.

# Choosing an Installation Location

## Projector installation location

- Carry out power supply wiring work for the installation location of the setting plate in advance.
- Install the projector away from other electric devices such as fluorescent lights or air conditioners. Some kinds of fluorescent lights could interfere with the remote control of the projector.
- When installing the projector, make sure there is a gap of at least 50 cm from the wall to the projector's air exhaust and intake vents on the left and right.

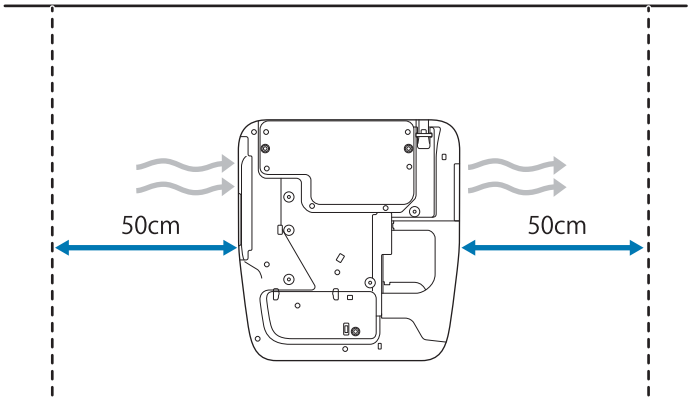


- When installing two or more projectors in parallel, make sure the temperature of the surrounding environment is less than 35°C.

  If the environment is too hot, the projector may overheat and the power may turn off without warning. When using the projector in an environment of 35°C or more, install a partition to block the heat vented from the projector's air exhaust vent. Make sure the partition is slightly larger than the exhaust vent (approx. 2 cm wider and taller), and then install the partition 10 to 30 cm from the exhaust vent.

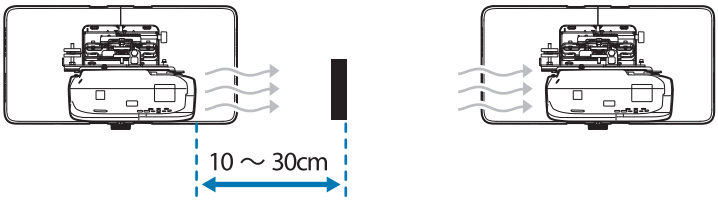


- It is recommended to keep connection cable length less than 20 meters to reduce external noise.
- We recommend using stick-on screens or board screens.
- Install the projector so that it is tilted at an angle of no more than ±3° vertically and horizontally in relation to the screen.

## Using the Product Safely

**Safety Instructions . . . . . 1**
Safety indications . . . . . 1
Explanation of Symbols . . . . . 1
Safety Precautions for Installation . . . . . 1
About This Installation Guide . . . . . 3
**Choosing an Installation Location . . . . . 4**
Projector installation location . . . . . 4

## Installation Guide

**Installation Work Flow . . . . . 6**
Installing one projector . . . . . 6
When two or more projectors are installed in parallel . . . . . 6
**Package Contents . . . . . 7**
Setting plate . . . . . 7
**Specifications . . . . . 8**
Setting plate . . . . . 8
Wall plate cover . . . . . 8
Wall plate . . . . . 9
Vertical slide adjustment range . . . . . 9
Horizontal slide adjustment range . . . . . 10
Forward/backward slide adjustment range . . 10
Position for installing accessories . . . . . 10
**Projection Distance Table . . . . . 12**
Figures of Installation Dimensions . . . . . 12
Interactive white board table . . . . . 13
When Projected Image is Smaller than 75 Inches 13
EB-685W/EB-675W (16:10 projected image) . . 14
EB-685W/EB-675W (16:9 projected image) . . . 16
EB-685W/EB-675W (4:3 projected image) . . . . 17
EB-680/EB-670 (4:3 projected image) . . . . . 18
EB-680/EB-670 (16:9 projected image) . . . . . 18
EB-680/EB-670 (16:10 projected image) . . . . . 19
When Projected Image is 75 inches or more . . . . 21
EB-685W/EB-675W (16:10 projected image) . . 21
EB-685W/EB-675W (16:9 projected image) . . . 23
EB-685W/EB-675W (4:3 projected image) . . . . 24
EB-680/EB-670 (4:3 projected image) . . . . . 25
EB-680/EB-670 (16:9 projected image) . . . . . 25
EB-680/EB-670 (16:10 projected image) . . . . . 26
**Installing the Setting Plate . . . . . 28**
Connecting Devices . . . . . 28
Necessary cables . . . . . 28
Installation Procedure . . . . . 29
Assemble the parts . . . . . 29
Install the wall plate on the wall . . . . . 31
Determine the projection distance, and then pass the cables through the setting plate . . . . 33
Attaching the setting plate to the wall plate . . 35
Securing the projector to the setting plate . . . 37
Adjusting the Position of the Projector . . . . . 40
Arc Correction . . . . . 45
Attaching the Covers . . . . . 48

## Appendix

**Installing Multiple Projectors in Parallel (Multi-Projection) . . . . . 51**
Multi-Projection settings . . . . . 51
Setting the Projector ID . . . . . 51
Adjusting the Image in Multi-Projection . . . . . 54
**Batch Setup Function . . . . . 56**
Setup Using a USB flash drive . . . . . 57
Saving settings to the USB flash drive . . . . . 57
Copying saved settings to other projectors . . 59
Setup by Connecting the Computer and Projector with a USB Cable . . . . . 61
Saving settings to a computer . . . . . 61
Copying saved settings to other projectors . . 63
When Setup Fails . . . . . 64
**Attaching a Security Cable . . . . . 65**
**General Notice . . . . . 66**

# Installation Work Flow

## Installing one projector

Follow the procedures below to mount the projector on a wall.

1. Installing the Setting Plate and the Projector (☛ p.28)
2. Adjusting the Position of the Projector (☛ p.40)

## When two or more projectors are installed in parallel

When using the multi-projection function (when multiple projectors are installed in parallel to project one, large screen), follow the steps below.

1. Installing the Setting Plate and the Projector (☛ p.28)
2. Adjusting the Position of the Projector (☛ p.40)
3. Setting the Projector ID (☛ p.51)
4. Adjusting the Image in Multi-Projection (☛ p.54)

# Package Contents

## Setting plate

The following supplied items are necessary to mount the projector on a wall. Confirm that you have all items before beginning.

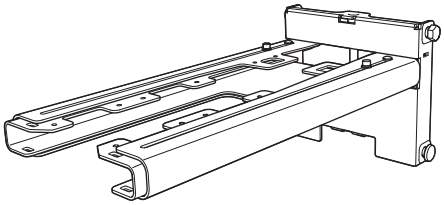

Setting plate

Hexagonal axis

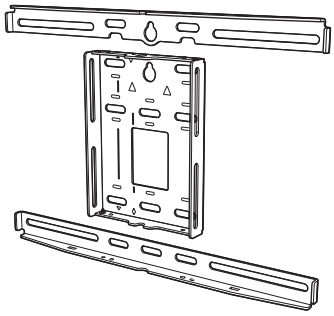

Wall plate

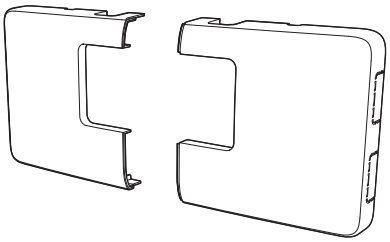

Wall plate cover

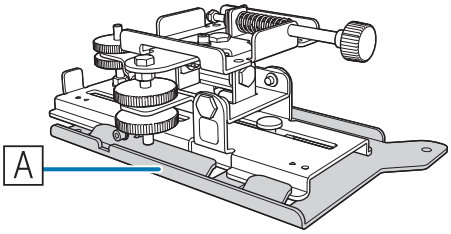


3-axis adjustment unit
*The slide plate ( A ) is secured during shipping.

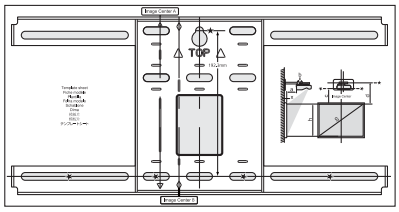


Template sheet
(for installing the wall plate)

End cap

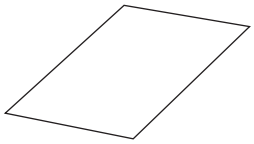

Masking sticker

Hexagon wrench (for M4)

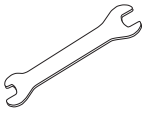

Open-ended spanner
13 mm (for M8 and M6),
6 mm (for hexagonal axis)

| Shape | Name | Quantity | Application |
|---|---|---|---|
| | M4 x 12 mm hexagon socket head cap bolt with washer/spring washer | 5 | For wall plate assembly |
| | | 4 | For 3-axis adjustment unit/arm installation |
| | | 4 | For slide plate/projector installation |
| | M6 x 20 mm hexagon shoulder head bolt with washer/spring washer | 1 | For setting plate/wall plate installation |
| | M6 x 20 mm cross recessed head shoulder screws with plastic washers | 3 | |

- Use the bolts or screws supplied with this product to install it as directed in this guide. Do not substitute these bolts with any other types.
- You need to use commercially available M10 x 60 mm anchors (at least 4) and one M10 screw to attach the wall plate to the wall.
- Gather the tools and parts you need before you begin installation.

# Specifications

## Setting plate

| Item | Specification | Remark | Reference Page |
|---|---|---|---|
| Setting plate weight | Approx. 7.2 kg | Setting plate (2.9 kg), 3-axis adjustment unit (1.0 kg), slide plate (0.6 kg), wall plate (2.0 kg), wall plate cover and end cap (0.7 kg) | |
| Maximum load capacity | 9.5 kg | | |
| Forward/backward slide adjustment range | 13 to 350 mm | Arm slide adjustment range: 0 to 263 mm<br>Adjustment for 3-axis adjustment unit installation position: 87 mm | See the figure below |
| Vertical slide adjustment range | ±38 mm | | See the figure below |
| Horizontal roll adjustment range | ±3° | Fine adjustments possible with adjustment dial | ☛ p.40 |
| Horizontal rotation adjustment range | ±8° | Fine adjustments possible with adjustment dial | ☛ p.40 |
| Vertical tilt adjustment range | ±3° | Fine adjustments possible with adjustment dial | ☛ p.40 |
| Horizontal slide adjustment range | ±45 mm | | See the figure below |

### Wall plate cover

The following dimensions apply when attaching the wall plate cover.

[Unit: mm]

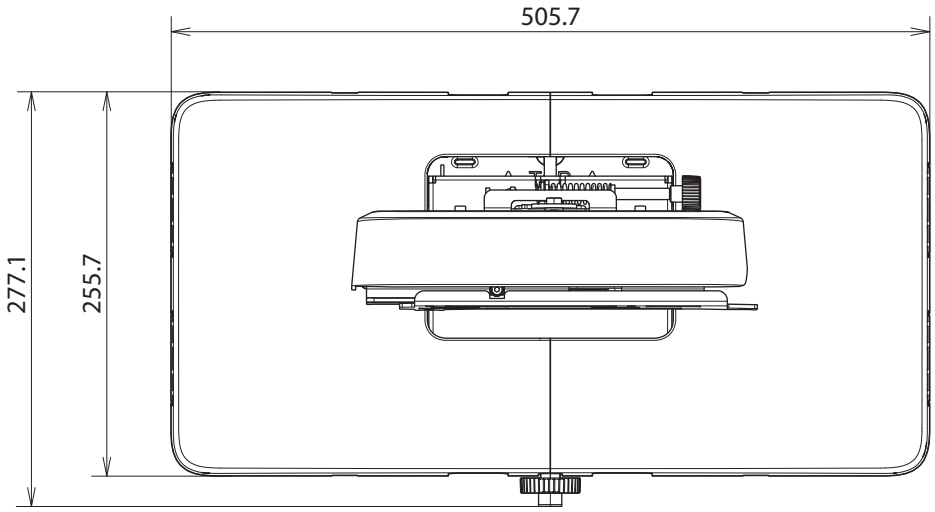


When installing the wall plate cover, you need a space of approximately 263 mm from the center of the wall plate to the left side, and approximately 253 mm to the right side.

## Wall plate

The following figure shows two frames connected to one plate (separate when shipped).

[Unit: mm]

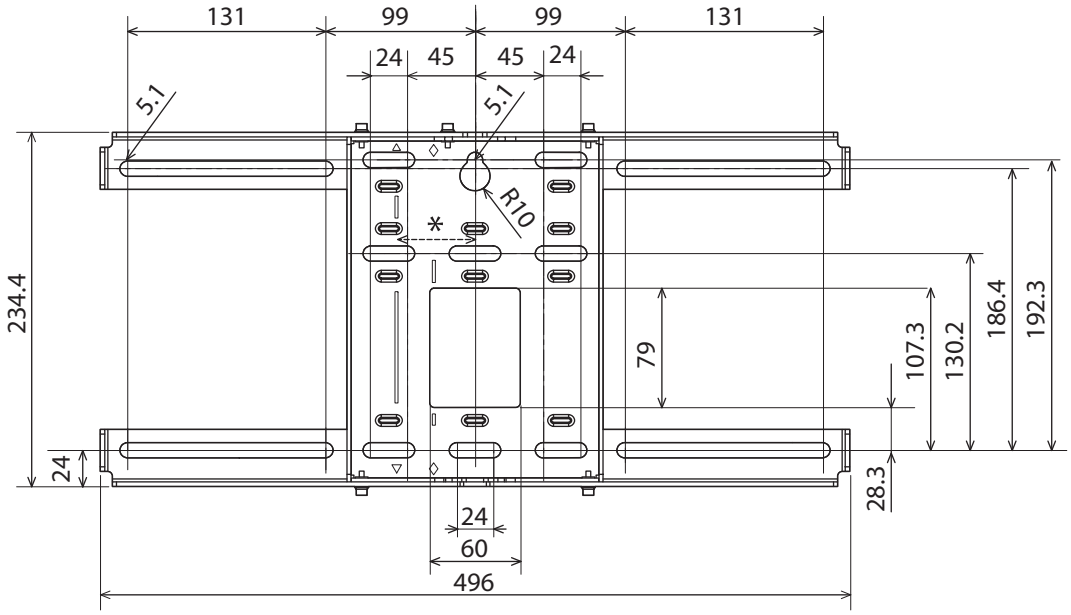


* The offset value for the position of the center of the projected image and the center of the wall plate is 52 mm.

### Cable routing holes

When routing cables to connect to the projector through a wall, use positions ( A ) and ( B ) in the following figure as the cable routing holes.

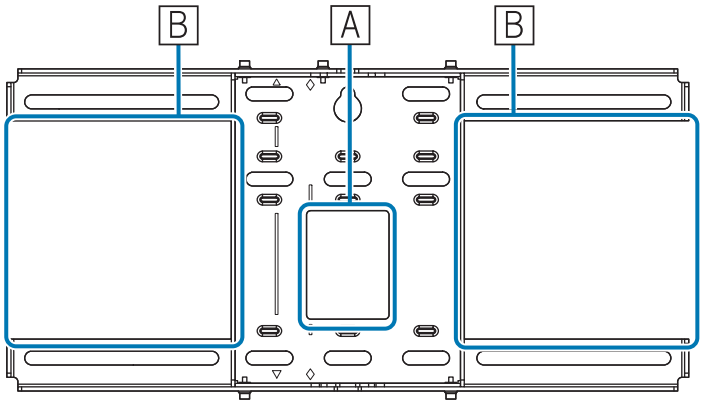


## Vertical slide adjustment range

[Unit: mm]

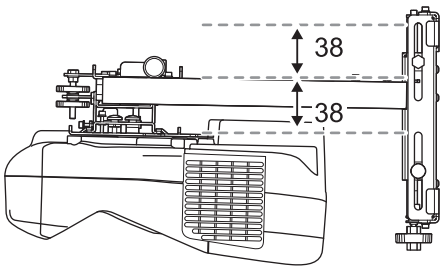

## Horizontal slide adjustment range

[Unit: mm]

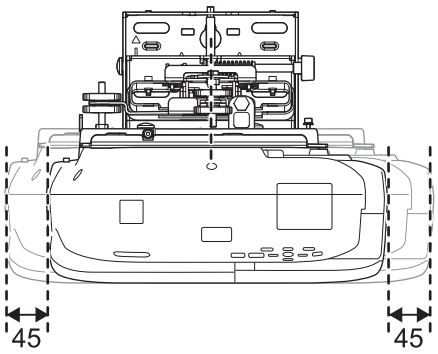


## Forward/backward slide adjustment range

### Arm slide adjustment range

[Unit: mm]

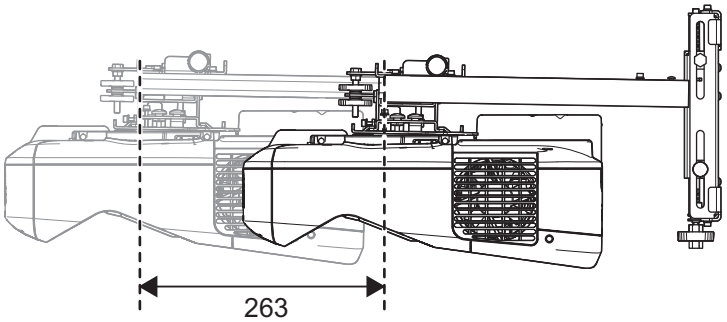


### Adjustment range for 3-axis adjustment unit installation position

[Unit: mm]

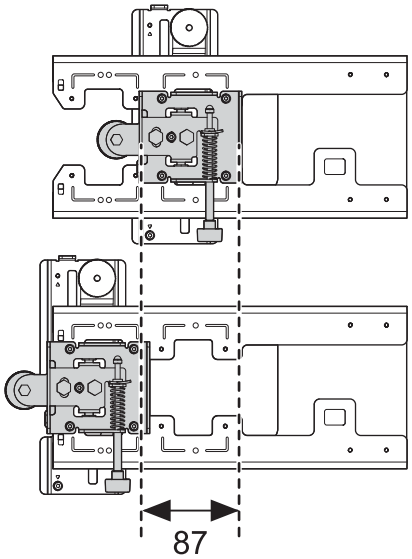


## Position for installing accessories

These screw holes allow you to secure peripheral devices and accessories such as external tuners. Use commercially available M4 screws.

[Unit: mm]

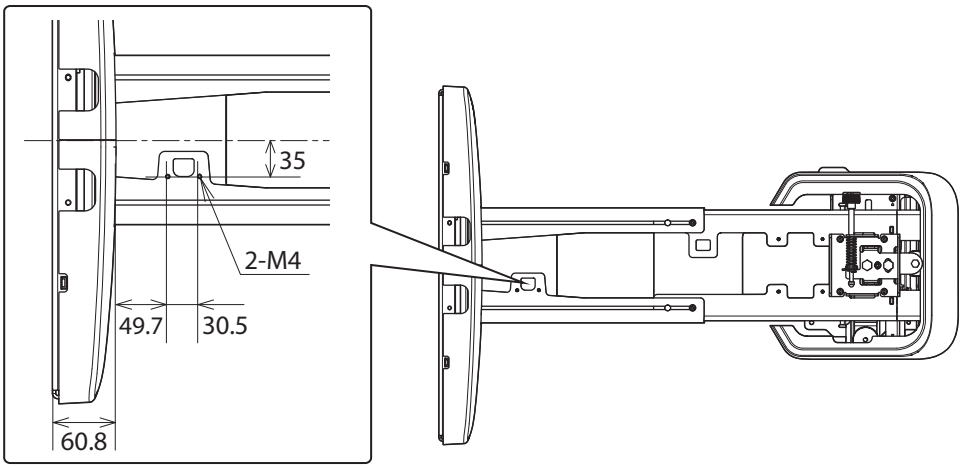

# Projection Distance Table

## Figures of Installation Dimensions

To find the appropriate projection distance, see the following figures when installing. The values are only rough estimates.

The recommended range for the projection distance (a) is 62 to 285 mm.

The offset value for the position of the center of the projected image and the center of the wall plate is 52 mm.

[Unit: mm]

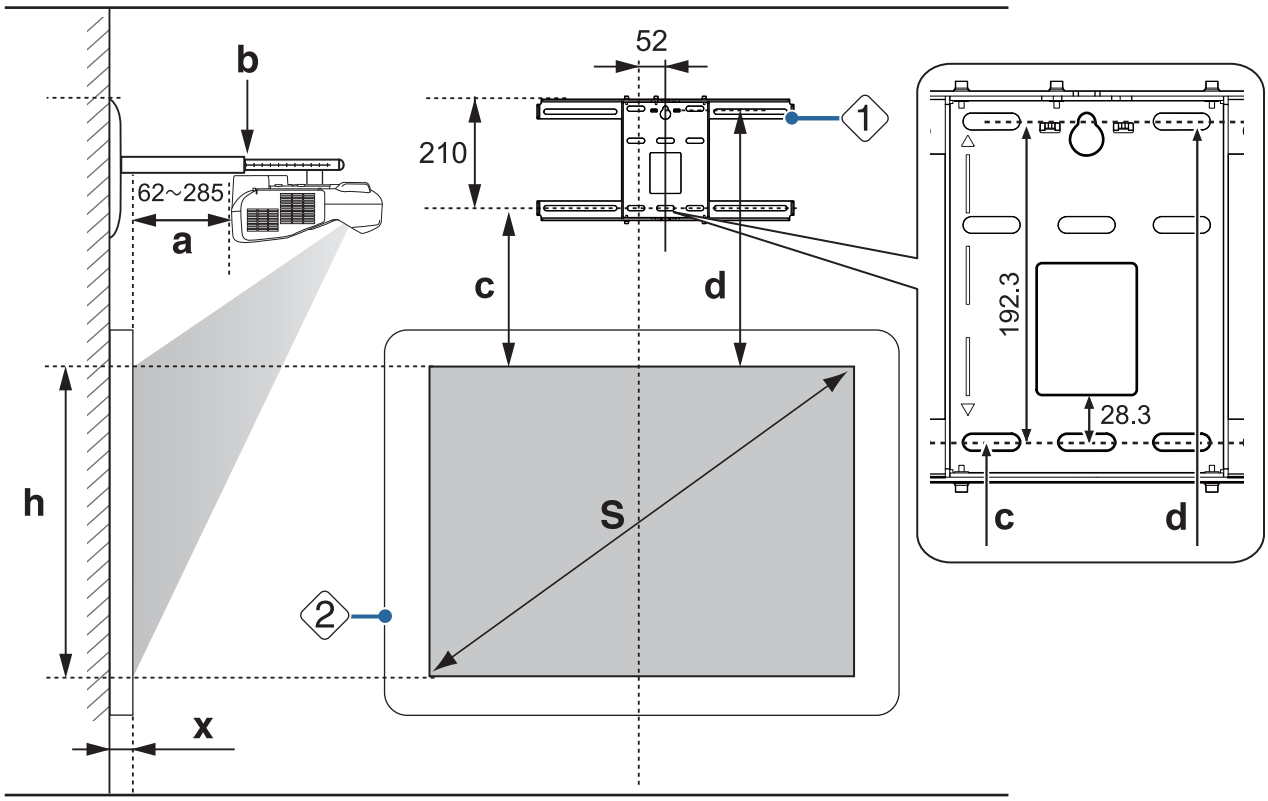


S : Projected image size

a : Minimum projection distance (Wide: maximum zoom)
to maximum (Tele: minimum zoom)

b : Numbers on the arm slide scale

c : Distance from the top of the projected image to the bottom wall plate installation screw hole

d : Distance from the top of the projected image to the wall plate temporary securing screw hole

h : Height of projected image

x : Distance from surface of screen to wall (100 mm or less)

1 : Wall plate

2 : Screen

Aspect ratio for standard projected image (EB-685W/EB-675W)

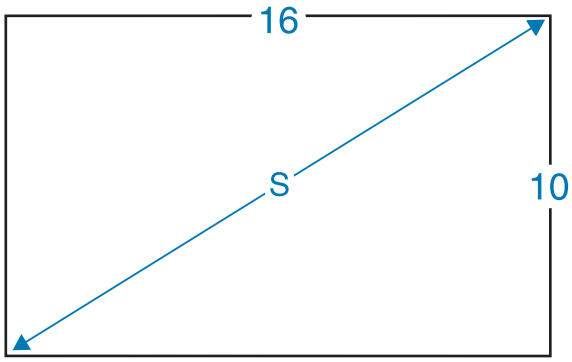


When the value for (X) is small, such as when projecting directly onto a wall, because the projector and the Wall plate cover are close together, you may not be able to project images less than 63 inches.

Aspect ratio for standard projected image (EB-680/EB-670)

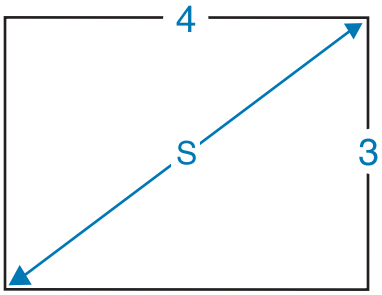


## Interactive white board table

When you have already installed an interactive board, check the size of the whiteboards below, and then refer to the projection distance table.

| Projected Image Size | 16:10 | 4:3 | 16:9 |
|---|---|---|---|
| 64" | - | Promethean ActivBoard 164 | - |
| 77" | - | SMART Board® SBM680<br>SMART Board® X880/880-SMP | - |
| 78" | - | Promethean ActivBoard 178<br>Promethean ActivBoard 578Pro<br>Promethean ActivBoard Touch 78" | - |
| 79" | - | Promethean ActivBoard 378Pro | - |
| 87" | SMART Board® SBM685<br>SMART Board® X885/885-SMP<br>Promethean ActivBoard 387Pro<br>Promethean ActivBoard 587Pro | - | - |
| 88" | Promethean ActivBoard Touch 88" | - | - |
| 95" | - | - | Promethean ActivBoard 595Pro |
| 97" | - | - | Promethean ActivBoard 395Pro |

# When Projected Image is Smaller than 75 Inches

Mount the 3-axis adjustment unit at the position marked with a ◯ stamp ( A ).

The projection distance table provides the figures when mounting the 3-axis adjustment unit at the position marked with a ◯ stamp ( A ).

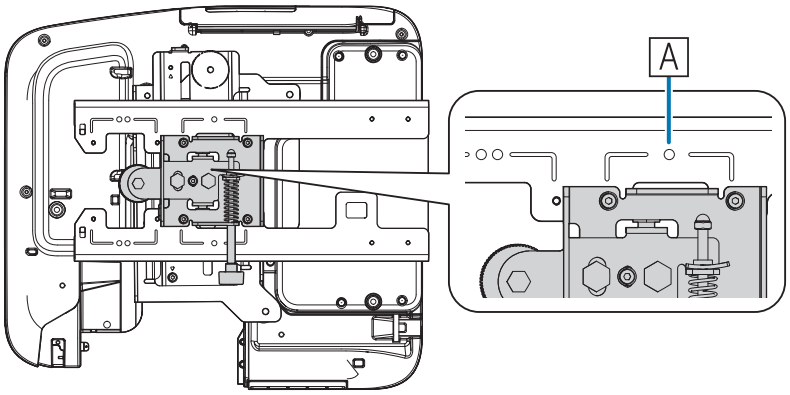


The distance from the top of the projected image to the bottom wall plate installation screw hole (c) is the number given when the vertical slide is set to the standard position ( B ).

Match the notch on the setting plate to the position of the stamp on the wall plate.

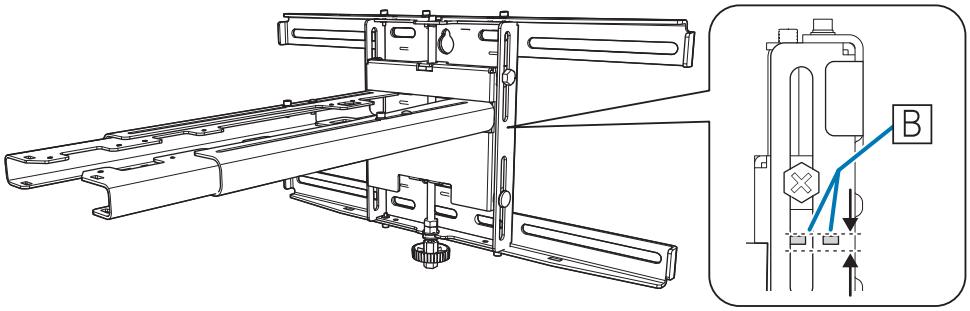


## EB-685W/EB-675W (16:10 projected image)

[Unit: cm]

| S<br>Projected image size | | a<br>Projection Distance Minimum (Wide) to Maximum (Tele) | b<br>Numbers on the arm slide scale | c<br>Distance to the bottom wall plate installation screw hole | d<br>Distance from the top of the projected image to the wall plate temporary securing screw hole | h<br>Height of projected image |
|---|---|---|---|---|---|---|
| 61" | 131.4x82.1 | 4.4 to 17.6 | 15.1 to 28.3 | 17.8 | 37.0 | 82.1 |
| 62" | 133.5x83.5 | 5.0 to 18.4 | 15.7 to 29.1 | 18.1 | 37.3 | 83.4 |
| 63" | 135.7x84.8 | 5.6 to 19.3 | 16.3 to 30.0 | 18.4 | 37.6 | 84.8 |
| 64" | 137.9x86.2 | 6.3 to 20.1 | 17.0 to 30.8 | 18.6 | 37.8 | 86.2 |
| 65" | 140.0x87.5 | 6.9 to 20.9 | 17.6 to 31.6 | 18.9 | 38.1 | 87.5 |
| 66" | 142.2x88.8 | 7.5 to 21.8 | 18.2 to 32.5 | 19.2 | 38.4 | 88.8 |
| 67" | 144.3x90.2 | 8.1 to 22.6 | 18.8 to 33.3 | 19.5 | 38.7 | 90.2 |
| 68" | 146.5x91.5 | 8.7 to 23.4 | 19.4 to 34.1 | 19.8 | 39.0 | 91.5 |
| 69" | 148.6x92.9 | 9.3 to 24.3 | 20.0 to 35.0 | 20.0 | 39.2 | 92.9 |
| 70" | 150.8x94.2 | 10.0 to 25.1 | 20.7 to 35.8 | 20.3 | 39.5 | 94.3 |
| 71" | 152.9x95.6 | 10.6 to 25.9 | 21.3 to 36.6 | 20.6 | 39.8 | 95.6 |

| S<br>Projected image size | | a<br>Projection Distance Minimum (Wide) to Maximum (Tele) | b<br>Numbers on the arm slide scale | c<br>Distance to the bottom wall plate installation screw hole | d<br>Distance from the top of the projected image to the wall plate temporary securing screw hole | h<br>Height of projected image |
|---|---|---|---|---|---|---|
| 72" | 155.1x96.9 | 11.2 to 26.8 | 21.9 to 37.5 | 20.9 | 40.1 | 96.9 |
| 73" | 157.2x98.3 | 11.8 to 27.6 | 22.5 to 38.3 | 21.2 | 40.4 | 98.2 |
| 74" | 159.4x99.6 | 12.4 to 28.4 | 23.1 to 39.1 | 21.4 | 40.6 | 99.7 |

Images smaller than 61 inches are not projected correctly.

## EB-685W/EB-675W (16:9 projected image)

[Unit: cm]

| S<br>Projected image size | | a<br>Projection Distance Minimum (Wide) to Maximum (Tele) | b<br>Numbers on the arm slide scale | c<br>Distance to the bottom wall plate installation screw hole | d<br>Distance from the top of the projected image to the wall plate temporary securing screw hole | h<br>Height of projected image |
|---|---|---|---|---|---|---|
| 59" | 130.6x73.5 | 4.2 to 17.3 | 14.9 to 28.0 | 21.8 | 41.0 | 73.4 |
| 60" | 132.8x74.7 | 4.8 to 18.2 | 15.5 to 28.9 | 22.1 | 41.3 | 74.7 |
| 61" | 135.0x76.0 | 5.5 to 19.0 | 16.2 to 29.7 | 22.5 | 41.7 | 76.0 |
| 62" | 137.3x77.2 | 6.1 to 19.9 | 16.8 to 30.6 | 22.8 | 42.0 | 77.3 |
| 63" | 139.5x78.5 | 6.7 to 20.7 | 17.4 to 31.4 | 23.2 | 42.4 | 78.5 |
| 64" | 141.7x79.7 | 7.4 to 21.6 | 18.1 to 32.3 | 23.6 | 42.8 | 79.7 |
| 65" | 143.9x80.9 | 8.0 to 22.4 | 18.7 to 33.1 | 23.9 | 43.1 | 81.0 |
| 66" | 146.1x82.2 | 8.6 to 23.3 | 19.3 to 34.0 | 24.3 | 43.5 | 82.2 |
| 67" | 148.3x83.4 | 9.3 to 24.2 | 20.0 to 34.9 | 24.6 | 43.8 | 83.5 |
| 68" | 150.5x84.7 | 9.9 to 25.0 | 20.6 to 35.7 | 25.0 | 44.2 | 84.7 |
| 69" | 152.8x85.9 | 10.5 to 25.9 | 21.2 to 36.6 | 25.3 | 44.5 | 86.0 |
| 70" | 155.0x87.2 | 11.2 to 26.7 | 21.9 to 37.4 | 25.7 | 44.9 | 87.2 |
| 71" | 157.2x88.4 | 11.8 to 27.6 | 22.5 to 38.3 | 26.1 | 45.3 | 88.4 |
| 72" | 159.4x89.7 | 12.4 to 28.4 | 23.1 to 39.1 | 26.4 | 45.6 | 89.7 |
| 73" | 161.6x90.9 | 13.1 to 29.3 | 23.8 to 40.0 | 26.8 | 46.0 | 90.9 |
| 74" | 163.8x92.1 | 13.7 to 30.2 | 24.4 to 40.9 | 27.1 | 46.3 | 92.2 |

Images smaller than 59 inches are not projected correctly.

## EB-685W/EB-675W (4:3 projected image)

[Unit: cm]

| S<br>Projected image size | | a<br>Projection Distance Minimum (Wide) to Maximum (Tele) | b<br>Numbers on the arm slide scale | c<br>Distance to the bottom wall plate installation screw hole | d<br>Distance from the top of the projected image to the wall plate temporary securing screw hole | h<br>Height of projected image |
|---|---|---|---|---|---|---|
| 54" | 109.7x82.3 | 4.5 to 17.7 | 15.2 to 28.4 | 17.8 | 37.0 | 82.3 |
| 55" | 111.8x83.8 | 5.2 to 18.7 | 15.9 to 29.4 | 18.1 | 37.3 | 83.9 |
| 56" | 113.8x85.3 | 5.9 to 19.6 | 16.6 to 30.3 | 18.5 | 37.7 | 85.3 |
| 57" | 115.8x86.9 | 6.6 to 20.5 | 17.3 to 31.2 | 18.8 | 38.0 | 86.9 |
| 58" | 117.9x88.4 | 7.3 to 21.5 | 18.0 to 32.2 | 19.1 | 38.3 | 88.4 |
| 59" | 119.9x89.9 | 8.0 to 22.4 | 18.7 to 33.1 | 19.4 | 38.6 | 89.9 |
| 60" | 121.9x91.4 | 8.7 to 23.4 | 19.4 to 34.1 | 19.7 | 38.9 | 91.5 |
| 61" | 124.0x93.0 | 9.4 to 24.3 | 20.1 to 35.0 | 20.1 | 39.3 | 92.9 |
| 62" | 126.0x94.5 | 10.1 to 25.3 | 20.8 to 36.0 | 20.4 | 39.6 | 94.5 |
| 63" | 128.0x96.0 | 10.8 to 26.2 | 21.5 to 36.9 | 20.7 | 39.9 | 96.0 |
| 64" | 130.0x97.5 | 11.5 to 27.2 | 22.2 to 37.9 | 21.0 | 40.2 | 97.5 |
| 65" | 132.1x99.1 | 12.2 to 28.1 | 22.9 to 38.8 | 21.3 | 40.5 | 99.1 |
| 66" | 134.1x100.6 | 12.9 to 29.0 | 23.6 to 39.7 | 21.6 | 40.8 | 100.6 |
| 67" | 136.1x102.1 | 13.6 to 30.0 | 24.3 to 40.7 | 22.0 | 41.2 | 102.1 |
| 68" | 138.2x103.6 | 14.3 to 30.9 | 25.0 to 41.6 | 22.3 | 41.5 | 103.6 |
| 69" | 140.2x105.2 | 15.0 to 31.2 | 25.7 to 41.9 | 22.6 | 41.8 | 105.2 |
| 70" | 142.2x106.7 | 15.7 to 31.2 | 26.4 to 41.9 | 22.9 | 42.1 | 106.7 |
| 71" | 144.3x108.2 | 16.4 to 31.2 | 27.1 to 41.9 | 23.2 | 42.4 | 108.2 |
| 72" | 146.3x109.7 | 17.1 to 31.2 | 27.8 to 41.9 | 23.5 | 42.7 | 109.8 |
| 73" | 148.3x111.3 | 17.8 to 31.2 | 28.5 to 41.9 | 23.9 | 43.1 | 111.2 |
| 74" | 150.4x112.8 | 18.5 to 31.2 | 29.2 to 41.9 | 24.2 | 43.4 | 112.8 |

Images smaller than 54 inches are not projected correctly.

## EB-680/EB-670 (4:3 projected image)

[Unit: cm]

| S<br>Projected image size | | a<br>Projection Distance Minimum (Wide) to Maximum (Tele) | b<br>Numbers on the arm slide scale | c<br>Distance to the bottom wall plate installation screw hole | d<br>Distance from the top of the projected image to the wall plate temporary securing screw hole | h<br>Height of projected image |
|---|---|---|---|---|---|---|
| 60" | 121.9x91.4 | 6.8 to 20.7 | 17.5 to 31.4 | 16.3 | 35.5 | 91.4 |
| 61" | 124.0x93.0 | 7.4 to 21.6 | 18.1 to 32.3 | 16.6 | 35.8 | 92.9 |
| 62" | 126.0x94.5 | 8.1 to 22.5 | 18.8 to 33.2 | 16.8 | 36.0 | 94.5 |
| 63" | 128.0x96.0 | 8.8 to 23.4 | 19.5 to 34.1 | 17.1 | 36.3 | 96.0 |
| 64" | 130.0x97.5 | 9.4 to 24.3 | 20.1 to 35.0 | 17.3 | 36.5 | 97.6 |
| 65" | 132.1x99.1 | 10.1 to 25.2 | 20.8 to 35.9 | 17.6 | 36.8 | 99.1 |
| 66" | 134.1x100.6 | 10.7 to 26.0 | 21.4 to 36.7 | 17.9 | 37.1 | 100.5 |
| 67" | 136.1x102.1 | 11.4 to 26.9 | 22.1 to 37.6 | 18.1 | 37.3 | 102.1 |
| 68" | 138.2x103.6 | 12.1 to 27.8 | 22.8 to 38.5 | 18.4 | 37.6 | 103.6 |
| 69" | 140.2x105.2 | 12.7 to 28.7 | 23.4 to 39.4 | 18.6 | 37.8 | 105.2 |
| 70" | 142.2x106.7 | 13.4 to 29.6 | 24.1 to 40.3 | 18.9 | 38.1 | 106.7 |
| 71" | 144.3x108.2 | 14.1 to 30.5 | 24.8 to 41.2 | 19.2 | 38.4 | 108.2 |
| 72" | 146.3x109.7 | 14.7 to 31.2 | 25.4 to 41.9 | 19.4 | 38.6 | 109.8 |
| 73" | 148.3x111.3 | 15.4 to 31.2 | 26.1 to 41.9 | 19.7 | 38.9 | 111.2 |
| 74" | 150.4x112.8 | 16.0 to 31.2 | 26.7 to 41.9 | 19.9 | 39.1 | 112.8 |

Images smaller than 60 inches are not projected correctly.

## EB-680/EB-670 (16:9 projected image)

[Unit: cm]

| S<br>Projected image size | | a<br>Projection Distance Minimum (Wide) to Maximum (Tele) | b<br>Numbers on the arm slide scale | c<br>Distance to the bottom wall plate installation screw hole | d<br>Distance from the top of the projected image to the wall plate temporary securing screw hole | h<br>Height of projected image |
|---|---|---|---|---|---|---|
| 55" | 121.8x68.5 | 6.7 to 20.6 | 17.4 to 31.3 | 27.7 | 46.9 | 68.5 |
| 56" | 124.0x69.7 | 7.4 to 21.6 | 18.1 to 32.3 | 28.2 | 47.4 | 69.7 |
| 57" | 126.2x71.0 | 8.2 to 22.6 | 18.9 to 33.3 | 28.7 | 47.9 | 71.0 |
| 58" | 128.4x72.2 | 8.9 to 23.5 | 19.6 to 34.2 | 29.2 | 48.4 | 72.2 |
| 59" | 130.6x73.5 | 9.6 to 24.5 | 20.3 to 35.2 | 29.7 | 48.9 | 73.4 |

| S<br>Projected image size | | a<br>Projection Distance Minimum (Wide) to Maximum (Tele) | b<br>Numbers on the arm slide scale | c<br>Distance to the bottom wall plate installation screw hole | d<br>Distance from the top of the projected image to the wall plate temporary securing screw hole | h<br>Height of projected image |
|---|---|---|---|---|---|---|
| 60" | 132.8x74.7 | 10.3 to 25.5 | 21.0 to 36.2 | 30.2 | 49.4 | 74.7 |
| 61" | 135.0x76.0 | 11.0 to 26.5 | 21.7 to 37.2 | 30.6 | 49.8 | 76.0 |
| 62" | 137.3x77.2 | 11.8 to 27.4 | 22.5 to 38.1 | 31.1 | 50.3 | 77.2 |
| 63" | 139.5x78.5 | 12.5 to 28.4 | 23.2 to 39.1 | 31.6 | 50.8 | 78.5 |
| 64" | 141.7x79.7 | 13.2 to 29.4 | 23.9 to 40.1 | 32.1 | 51.3 | 79.7 |
| 65" | 143.9x80.9 | 13.9 to 30.4 | 24.6 to 41.1 | 32.6 | 51.8 | 80.9 |
| 66" | 146.1x82.2 | 14.7 to 31.2 | 25.4 to 41.9 | 33.1 | 52.3 | 82.2 |
| 67" | 148.3x83.4 | 15.4 to 31.2 | 26.1 to 41.9 | 33.6 | 52.8 | 83.4 |
| 68" | 150.5x84.7 | 16.1 to 31.2 | 26.8 to 41.9 | 34.1 | 53.3 | 84.7 |
| 69" | 152.8x85.9 | 16.8 to 31.2 | 27.5 to 41.9 | 34.6 | 53.8 | 85.9 |
| 70" | 155.0x87.2 | 17.5 to 31.2 | 28.2 to 41.9 | 35.1 | 54.3 | 87.1 |
| 71" | 157.2x88.4 | 18.3 to 31.2 | 29.0 to 41.9 | 35.6 | 54.8 | 88.4 |
| 72" | 159.4x89.7 | 19.0 to 31.2 | 29.7 to 41.9 | 36.0 | 55.2 | 89.7 |
| 73" | 161.6x90.9 | 19.7 to 31.2 | 30.4 to 41.9 | 36.5 | 55.7 | 90.9 |
| 74" | 163.8x92.1 | 20.4 to 31.2 | 31.1 to 41.9 | 37.0 | 56.2 | 92.2 |

Images smaller than 55 inches are not projected correctly.

## EB-680/EB-670 (16:10 projected image)

[Unit: cm]

| S<br>Projected image size | | a<br>Projection Distance Minimum (Wide) to Maximum (Tele) | b<br>Numbers on the arm slide scale | c<br>Distance to the bottom wall plate installation screw hole | d<br>Distance from the top of the projected image to the wall plate temporary securing screw hole | h<br>Height of projected image |
|---|---|---|---|---|---|---|
| 56" | 120.6x75.4 | 6.3 to 20.1 | 15.0 to 28.8 | 23.7 | 42.9 | 75.4 |
| 57" | 122.8x76.7 | 7.0 to 21.1 | 15.7 to 29.8 | 24.1 | 43.3 | 76.7 |
| 58" | 124.9x78.1 | 7.7 to 22.0 | 16.4 to 30.7 | 24.5 | 43.7 | 78.1 |
| 59" | 127.1x79.4 | 8.4 to 23.0 | 17.1 to 31.7 | 24.9 | 44.1 | 79.4 |
| 60" | 129.2x80.8 | 9.2 to 23.9 | 17.9 to 32.6 | 25.3 | 44.5 | 80.8 |
| 61" | 131.4x82.1 | 9.9 to 24.8 | 18.6 to 33.5 | 25.7 | 44.9 | 82.1 |
| 62" | 133.5x83.5 | 10.6 to 25.8 | 19.3 to 34.5 | 26.1 | 45.3 | 83.5 |
| 63" | 135.7x84.8 | 11.3 to 26.7 | 20.0 to 35.4 | 26.5 | 45.7 | 84.9 |

| S<br>Projected image size | | a<br>Projection Distance Minimum (Wide) to Maximum (Tele) | b<br>Numbers on the arm slide scale | c<br>Distance to the bottom wall plate installation screw hole | d<br>Distance from the top of the projected image to the wall plate temporary securing screw hole | h<br>Height of projected image |
|---|---|---|---|---|---|---|
| 64" | 137.9x86.2 | 12.0 to 27.7 | 20.7 to 36.4 | 27.0 | 46.2 | 86.1 |
| 65" | 140.0x87.5 | 12.7 to 28.6 | 21.4 to 37.3 | 27.4 | 46.6 | 87.5 |
| 66" | 142.2x88.8 | 13.4 to 29.6 | 22.1 to 38.3 | 27.8 | 47.0 | 88.8 |
| 67" | 144.3x90.2 | 14.1 to 30.5 | 22.8 to 39.2 | 28.2 | 47.4 | 90.2 |
| 68" | 146.5x91.5 | 14.8 to 31.5 | 23.5 to 40.2 | 28.6 | 47.8 | 91.5 |
| 69" | 148.6x92.9 | 15.5 to 32.4 | 24.2 to 41.1 | 29.0 | 48.2 | 92.9 |
| 70" | 150.8x94.2 | 16.2 to 33.2 | 24.9 to 41.9 | 29.4 | 48.6 | 94.3 |
| 71" | 152.9x95.6 | 16.9 to 33.2 | 25.6 to 41.9 | 29.8 | 49.0 | 95.6 |
| 72" | 155.1x96.9 | 17.6 to 33.2 | 26.3 to 41.9 | 30.2 | 49.4 | 97.0 |
| 73" | 157.2x98.3 | 18.3 to 33.2 | 27.0 to 41.9 | 30.7 | 49.9 | 98.2 |
| 74" | 159.4x99.6 | 19.0 to 33.2 | 27.7 to 41.9 | 31.1 | 50.3 | 99.6 |

Images smaller than 56 inches are not projected correctly.

- The values are only rough estimates. The value may differ depending on the location where you place the projector.
- When projecting in Tele, the quality of the projected images may decrease.
- When using EB-685W/EB-675W to project images at 4:3, the images are resized automatically and the quality of the projected images may decrease.

## When Projected Image is 75 inches or more

Mount the 3-axis adjustment unit at the position marked with a ○○ stamp ( A ).

The projection distance table provides the figures when mounting the 3-axis adjustment unit at the position marked with a ○○ stamp ( A ).

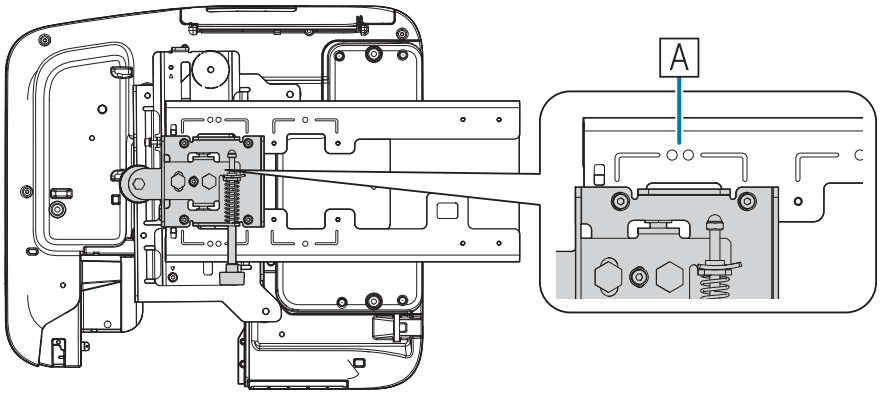


The distance from the top of the projected image to the bottom wall plate installation screw hole (c) is the number given when the vertical slide is set to the standard position ( B ).

Match the notch on the setting plate to the position of the stamp on the wall plate.

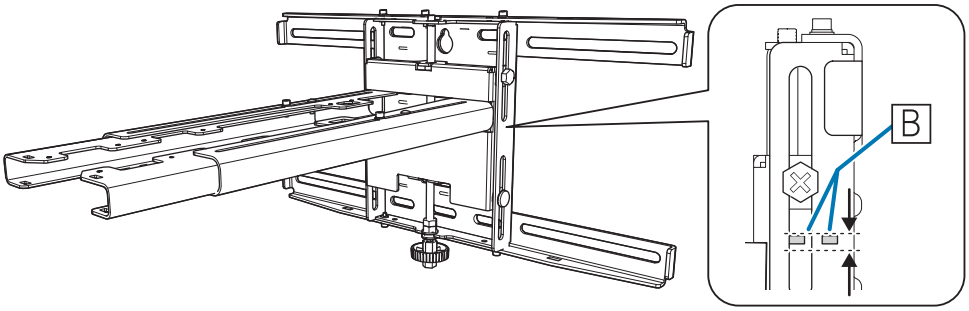


### EB-685W/EB-675W (16:10 projected image)

[Unit: cm]

| S<br>Projected image size | | a<br>Projection Distance Minimum (Wide) to Maximum (Tele) | b<br>Numbers on the arm slide scale | c<br>Distance to the bottom wall plate installation screw hole | d<br>Distance from the top of the projected image to the wall plate temporary securing screw hole | h<br>Height of projected image |
|---|---|---|---|---|---|---|
| 75" | 161.5x101.0 | 13.1 to 29.3 | 15.1 to 31.3 | 21.7 | 40.9 | 101.0 |
| 76" | 163.7x102.3 | 13.7 to 30.1 | 15.7 to 32.1 | 22.0 | 41.2 | 102.3 |
| 77" | 165.9x103.7 | 14.3 to 30.9 | 16.3 to 32.9 | 22.3 | 41.5 | 103.6 |
| 78" | 168.0x105.0 | 14.9 to 31.8 | 16.9 to 33.8 | 22.6 | 41.8 | 105.0 |
| 79" | 170.2x106.3 | 15.5 to 32.6 | 17.5 to 34.6 | 22.8 | 42.0 | 106.4 |
| 80" | 172.3x107.7 | 16.1 to 33.5 | 18.1 to 35.5 | 23.1 | 42.3 | 107.7 |
| 81" | 174.5x109.0 | 16.8 to 34.3 | 18.8 to 36.3 | 23.4 | 42.6 | 109.0 |
| 82" | 176.6x110.4 | 17.4 to 35.1 | 19.4 to 37.1 | 23.7 | 42.9 | 110.4 |

| S<br>Projected image size | | a<br>Projection Distance Minimum (Wide) to Maximum (Tele) | b<br>Numbers on the arm slide scale | c<br>Distance to the bottom wall plate installation screw hole | d<br>Distance from the top of the projected image to the wall plate temporary securing screw hole | h<br>Height of projected image |
|---|---|---|---|---|---|---|
| 83" | 178.8x111.7 | 18.0 to 36.0 | 20.0 to 38.0 | 24.0 | 43.2 | 111.7 |
| 84" | 180.9x113.1 | 18.6 to 36.8 | 20.6 to 38.8 | 24.2 | 43.4 | 113.1 |
| 85" | 183.1x114.4 | 19.2 to 37.6 | 21.2 to 39.6 | 24.5 | 43.7 | 114.5 |
| 86" | 185.2x115.8 | 19.9 to 38.5 | 21.9 to 40.5 | 24.8 | 44.0 | 115.8 |
| 87" | 187.4x117.1 | 20.5 to 39.3 | 22.5 to 41.3 | 25.1 | 44.3 | 117.1 |
| 88" | 189.5x118.5 | 21.1 to 39.9 | 23.1 to 41.9 | 25.4 | 44.6 | 118.4 |
| 89" | 191.7x119.8 | 21.7 to 39.9 | 23.7 to 41.9 | 25.6 | 44.8 | 119.9 |
| 90" | 193.9x121.2 | 22.3 to 39.9 | 24.3 to 41.9 | 25.9 | 45.1 | 121.2 |
| 91" | 196.0x122.5 | 22.9 to 39.9 | 24.9 to 41.9 | 26.2 | 45.4 | 122.5 |
| 92" | 198.2x123.9 | 23.6 to 39.9 | 25.6 to 41.9 | 26.5 | 45.7 | 123.8 |
| 93" | 200.3x125.2 | 24.2 to 39.9 | 26.2 to 41.9 | 26.8 | 46.0 | 125.2 |
| 94" | 202.5x126.5 | 24.8 to 39.9 | 26.8 to 41.9 | 27.1 | 46.3 | 126.5 |
| 95" | 204.6x127.9 | 25.4 to 39.9 | 27.4 to 41.9 | 27.3 | 46.5 | 127.9 |
| 96" | 206.8x129.2 | 26.0 to 39.9 | 28.0 to 41.9 | 27.6 | 46.8 | 129.2 |
| 97" | 208.9x130.6 | 26.7 to 39.9 | 28.7 to 41.9 | 27.9 | 47.1 | 130.6 |
| 98" | 211.1x131.9 | 27.3 to 39.9 | 29.3 to 41.9 | 28.2 | 47.4 | 131.9 |
| 99" | 213.2x133.3 | 27.9 to 39.9 | 29.9 to 41.9 | 28.5 | 47.7 | 133.2 |

Images larger than 99 inches are not projected correctly.

## EB-685W/EB-675W (16:9 projected image)

[Unit: cm]

| S<br>Projected image size | | a<br>Projection Distance Minimum (Wide) to Maximum (Tele) | b<br>Numbers on the arm slide scale | c<br>Distance to the bottom wall plate installation screw hole | d<br>Distance from the top of the projected image to the wall plate temporary securing screw hole | h<br>Height of projected image |
|---|---|---|---|---|---|---|
| 75" | 166.0x93.4 | 14.3 to 31.0 | 16.3 to 33.0 | 27.5 | 46.7 | 93.4 |
| 76" | 168.2x94.6 | 15.0 to 31.9 | 17.0 to 33.9 | 27.9 | 47.1 | 94.6 |
| 77" | 170.5x95.9 | 15.6 to 32.7 | 17.6 to 34.7 | 28.2 | 47.4 | 95.9 |
| 78" | 172.7x97.1 | 16.3 to 33.6 | 18.3 to 35.6 | 28.6 | 47.8 | 97.1 |
| 79" | 174.9x98.4 | 16.9 to 34.5 | 18.9 to 36.5 | 28.9 | 48.1 | 98.4 |
| 80" | 177.1x99.6 | 17.5 to 35.3 | 19.5 to 37.3 | 29.3 | 48.5 | 99.6 |
| 81" | 179.3x100.9 | 18.2 to 36.2 | 20.2 to 38.2 | 29.6 | 48.8 | 100.9 |
| 82" | 181.5x102.1 | 18.8 to 37.0 | 20.8 to 39.0 | 30.0 | 49.2 | 102.1 |
| 83" | 183.7x103.4 | 19.4 to 37.9 | 21.4 to 39.9 | 30.4 | 49.6 | 103.3 |
| 84" | 186.0x104.6 | 20.1 to 38.7 | 22.1 to 40.7 | 30.7 | 49.9 | 104.6 |
| 85" | 188.2x105.8 | 20.7 to 39.6 | 22.7 to 41.6 | 31.1 | 50.3 | 105.8 |
| 86" | 190.4x107.1 | 21.3 to 39.9 | 23.3 to 41.9 | 31.4 | 50.6 | 107.1 |
| 87" | 192.6x108.3 | 22.0 to 39.9 | 24.0 to 41.9 | 31.8 | 51.0 | 108.3 |
| 88" | 194.8x109.6 | 22.6 to 39.9 | 24.6 to 41.9 | 32.1 | 51.3 | 109.6 |
| 89" | 197.0x110.8 | 23.2 to 39.9 | 25.2 to 41.9 | 32.5 | 51.7 | 110.8 |
| 90" | 199.2x112.1 | 23.9 to 39.9 | 25.9 to 41.9 | 32.9 | 52.1 | 112.0 |
| 91" | 201.5x113.3 | 24.5 to 39.9 | 26.5 to 41.9 | 33.2 | 52.4 | 113.3 |
| 92" | 203.7x114.6 | 25.1 to 39.9 | 27.1 to 41.9 | 33.6 | 52.8 | 114.5 |
| 93" | 205.9x115.8 | 25.8 to 39.9 | 27.8 to 41.9 | 33.9 | 53.1 | 115.8 |
| 94" | 208.1x117.1 | 26.4 to 39.9 | 28.4 to 41.9 | 34.3 | 53.5 | 117.0 |
| 95" | 210.3x118.3 | 27.0 to 39.9 | 29.0 to 41.9 | 34.6 | 53.8 | 118.3 |
| 96" | 212.5x119.5 | 27.7 to 39.9 | 29.7 to 41.9 | 35.0 | 54.2 | 119.5 |
| 97" | 214.7x120.8 | 28.3 to 39.9 | 30.3 to 41.9 | 35.4 | 54.6 | 120.8 |

Images larger than 97 inches are not projected correctly.

## EB-685W/EB-675W (4:3 projected image)

[Unit: cm]

| S<br>Projected image size | | a<br>Projection Distance Minimum (Wide) to Maximum (Tele) | b<br>Numbers on the arm slide scale | c<br>Distance to the bottom wall plate installation screw hole | d<br>Distance from the top of the projected image to the wall plate temporary securing screw hole | h<br>Height of projected image |
|---|---|---|---|---|---|---|
| 75" | 152.4x114.3 | 19.2 to 37.5 | 21.2 to 39.5 | 24.5 | 43.7 | 114.3 |
| 76" | 154.4x115.8 | 19.9 to 38.5 | 21.9 to 40.5 | 24.8 | 44.0 | 115.8 |
| 77" | 156.5x117.3 | 20.6 to 39.4 | 22.6 to 41.4 | 25.1 | 44.3 | 117.4 |
| 78" | 158.5x118.9 | 21.3 to 39.9 | 23.3 to 41.9 | 25.5 | 44.7 | 118.8 |
| 79" | 160.5x120.4 | 22.0 to 39.9 | 24.0 to 41.9 | 25.8 | 45.0 | 120.4 |
| 80" | 162.6x121.9 | 22.7 to 39.9 | 24.7 to 41.9 | 26.1 | 45.3 | 121.9 |
| 81" | 164.6x123.4 | 23.4 to 39.9 | 25.4 to 41.9 | 26.4 | 45.6 | 123.4 |
| 82" | 166.6x125.0 | 24.1 to 39.9 | 26.1 to 41.9 | 26.7 | 45.9 | 125.0 |
| 83" | 168.7x126.5 | 24.8 to 39.9 | 26.8 to 41.9 | 27.0 | 46.2 | 126.5 |
| 84" | 170.7x128.0 | 25.5 to 39.9 | 27.5 to 41.9 | 27.4 | 46.6 | 128.0 |
| 85" | 172.7x129.5 | 26.2 to 39.9 | 28.2 to 41.9 | 27.7 | 46.9 | 129.5 |
| 86" | 174.8x131.1 | 26.9 to 39.9 | 28.9 to 41.9 | 28.0 | 47.2 | 131.1 |
| 87" | 176.8x132.6 | 27.6 to 39.9 | 29.6 to 41.9 | 28.3 | 47.5 | 132.6 |
| 88" | 178.8x134.1 | 28.3 to 39.9 | 30.3 to 41.9 | 28.6 | 47.8 | 134.1 |

Images larger than 88 inches are not projected correctly.

## EB-680/EB-670 (4:3 projected image)

[Unit: cm]

| S<br>Projected image size | | a<br>Projection Distance Minimum (Wide) to Maximum (Tele) | b<br>Numbers on the arm slide scale | c<br>Distance to the bottom wall plate installation screw hole | d<br>Distance from the top of the projected image to the wall plate temporary securing screw hole | h<br>Height of projected image |
|---|---|---|---|---|---|---|
| 75" | 152.4x114.3 | 16.7 to 34.1 | 18.7 to 36.1 | 20.2 | 39.4 | 114.3 |
| 76" | 154.4x115.8 | 17.4 to 35.0 | 19.4 to 37.0 | 20.5 | 39.7 | 115.8 |
| 77" | 156.5x117.3 | 18.0 to 35.9 | 20.0 to 37.9 | 20.7 | 39.9 | 117.4 |
| 78" | 158.5x118.9 | 18.7 to 36.8 | 20.7 to 38.8 | 21.0 | 40.2 | 118.9 |
| 79" | 160.5x120.4 | 19.4 to 37.7 | 21.4 to 39.7 | 21.2 | 40.4 | 120.4 |
| 80" | 162.6x121.9 | 20.0 to 38.6 | 22.0 to 40.6 | 21.5 | 40.7 | 121.9 |
| 81" | 164.6x123.4 | 20.7 to 39.5 | 22.7 to 41.5 | 21.8 | 41.0 | 123.4 |
| 82" | 166.6x125.0 | 21.3 to 39.9 | 23.3 to 41.9 | 22.0 | 41.2 | 125.0 |
| 83" | 168.7x126.5 | 22.0 to 39.9 | 24.0 to 41.9 | 22.3 | 41.5 | 126.5 |
| 84" | 170.7x128.0 | 22.7 to 39.9 | 24.7 to 41.9 | 22.5 | 41.7 | 128.1 |
| 85" | 172.7x129.5 | 23.3 to 39.9 | 25.3 to 41.9 | 22.8 | 42.0 | 129.5 |
| 86" | 174.8x131.1 | 24.0 to 39.9 | 26.0 to 41.9 | 23.1 | 42.3 | 131.0 |
| 87" | 176.8x132.6 | 24.7 to 39.9 | 26.7 to 41.9 | 23.3 | 42.5 | 132.6 |
| 88" | 178.8x134.1 | 25.3 to 39.9 | 27.3 to 41.9 | 23.6 | 42.8 | 134.1 |
| 89" | 180.8x135.6 | 26.0 to 39.9 | 28.0 to 41.9 | 23.9 | 43.1 | 135.6 |
| 90" | 182.9x137.2 | 26.6 to 39.9 | 28.6 to 41.9 | 24.1 | 43.3 | 137.2 |
| 91" | 184.9x138.7 | 27.3 to 39.9 | 29.3 to 41.9 | 24.4 | 43.6 | 138.7 |
| 92" | 186.9x140.2 | 28.0 to 39.9 | 30.0 to 41.9 | 24.6 | 43.8 | 140.2 |
| 93" | 189.0x141.7 | 28.6 to 39.9 | 30.6 to 41.9 | 24.9 | 44.1 | 141.7 |
| 94" | 191.0x143.2 | 29.3 to 39.9 | 31.3 to 41.9 | 25.2 | 44.4 | 143.2 |

Images larger than 94 inches are not projected correctly.

## EB-680/EB-670 (16:9 projected image)

[Unit: cm]

| S<br>Projected image size | | a<br>Projection Distance Minimum (Wide) to Maximum (Tele) | b<br>Numbers on the arm slide scale | c<br>Distance to the bottom wall plate installation screw hole | d<br>Distance from the top of the projected image to the wall plate temporary securing screw hole | h<br>Height of projected image |
|---|---|---|---|---|---|---|
| 75" | 166.0x93.4 | 21.2 to 31.2 | 23.2 to 41.9 | 37.5 | 56.7 | 93.4 |
| 76" | 168.2x94.6 | 21.9 to 31.2 | 23.9 to 41.9 | 38.0 | 57.2 | 94.7 |
| 77" | 170.5x95.9 | 22.6 to 31.2 | 24.6 to 41.9 | 38.5 | 57.7 | 95.9 |
| 78" | 172.7x97.1 | 23.3 to 31.2 | 25.3 to 41.9 | 39.0 | 58.2 | 97.2 |
| 79" | 174.9x98.4 | 24.0 to 31.2 | 26.0 to 41.9 | 39.5 | 58.7 | 98.4 |
| 80" | 177.1x99.6 | 24.8 to 31.2 | 26.8 to 41.9 | 40.0 | 59.2 | 99.6 |
| 81" | 179.3x100.9 | 25.5 to 31.2 | 27.5 to 41.9 | 40.5 | 59.7 | 100.9 |
| 82" | 181.5x102.1 | 26.2 to 31.2 | 28.2 to 41.9 | 41.0 | 60.2 | 102.1 |
| 83" | 183.7x103.4 | 26.9 to 31.2 | 28.9 to 41.9 | 41.4 | 60.6 | 103.5 |
| 84" | 186.0x104.6 | 27.6 to 31.2 | 29.6 to 41.9 | 41.9 | 61.1 | 104.6 |
| 85" | 188.2x105.8 | 28.4 to 31.2 | 30.4 to 41.9 | 42.4 | 61.6 | 105.9 |
| 86" | 190.4x107.1 | 29.1 to 31.2 | 31.1 to 41.9 | 42.9 | 62.1 | 107.2 |
| 87" | 192.6x108.3 | 29.8 to 31.2 | 31.8 to 41.9 | 43.4 | 62.6 | 108.4 |

Images larger than 87 inches are not projected correctly.

## EB-680/EB-670 (16:10 projected image)

[Unit: cm]

| S<br>Projected image size | | a<br>Projection Distance Minimum (Wide) to Maximum (Tele) | b<br>Numbers on the arm slide scale | c<br>Distance to the bottom wall plate installation screw hole | d<br>Distance from the top of the projected image to the wall plate temporary securing screw hole | h<br>Height of projected image |
|---|---|---|---|---|---|---|
| 75" | 161.5x101.0 | 19.7 to 38.1 | 21.7 to 40.1 | 31.5 | 50.7 | 100.9 |
| 76" | 163.7x102.3 | 20.4 to 39.1 | 22.4 to 41.1 | 31.9 | 51.1 | 102.3 |
| 77" | 165.9x103.7 | 21.1 to 39.9 | 23.1 to 41.9 | 32.3 | 51.5 | 103.7 |
| 78" | 168.0x105.0 | 21.8 to 39.9 | 23.8 to 41.9 | 32.7 | 51.9 | 105.0 |
| 79" | 170.2x106.3 | 22.5 to 39.9 | 24.5 to 41.9 | 33.1 | 52.3 | 106.4 |
| 80" | 172.3x107.7 | 23.2 to 39.9 | 25.2 to 41.9 | 33.5 | 52.7 | 107.7 |
| 81" | 174.5x109.0 | 23.9 to 39.9 | 25.9 to 41.9 | 33.9 | 53.1 | 109.1 |
| 82" | 176.6x110.4 | 24.6 to 39.9 | 26.6 to 41.9 | 34.3 | 53.5 | 110.4 |
| 83" | 178.8x111.7 | 25.3 to 39.9 | 27.3 to 41.9 | 34.8 | 54.0 | 111.7 |
| 84" | 180.9x113.1 | 26.0 to 39.9 | 28.0 to 41.9 | 35.2 | 54.4 | 113.0 |

| S<br>Projected image size | | a<br>Projection Distance Minimum (Wide) to Maximum (Tele) | b<br>Numbers on the arm slide scale | c<br>Distance to the bottom wall plate installation screw hole | d<br>Distance from the top of the projected image to the wall plate temporary securing screw hole | h<br>Height of projected image |
|---|---|---|---|---|---|---|
| 85" | 183.1x114.4 | 26.7 to 39.9 | 28.7 to 41.9 | 35.6 | 54.8 | 114.4 |
| 86" | 185.2x115.8 | 27.4 to 39.9 | 29.4 to 41.9 | 36.0 | 55.2 | 115.8 |
| 87" | 187.4x117.1 | 28.1 to 39.9 | 30.1 to 41.9 | 36.4 | 55.6 | 117.1 |
| 88" | 189.5x118.5 | 28.8 to 39.9 | 30.8 to 41.9 | 36.8 | 56.0 | 118.5 |
| 89" | 191.7x119.8 | 29.5 to 39.9 | 31.5 to 41.9 | 37.2 | 56.4 | 119.8 |

Images larger than 89 inches are not projected correctly.

- The values are only rough estimates. The value may differ depending on the location where you place the projector.
- When projecting in Tele, the quality of the projected images may decrease.
- When using EB-685W/EB-675W to project images at 4:3, the images are resized automatically and the quality of the projected images may decrease.

# Installing the Setting Plate

## Connecting Devices

### Necessary cables

Prepare the necessary cables according to the devices being used.

- Power cord supplied (necessary)
- Optional computer cables and other cables (prepare according to the connected devices)

For details, see the projector's *User's Guide* (on the Document CD-ROM).

#### Prepare cables for the connected devices (example)

Document camera

Dedicated USB cable (supplied with document camera)

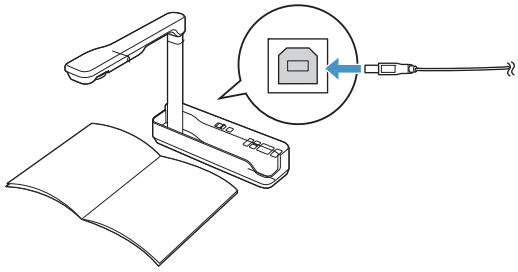

Computer

Computer cable (optional accessory)

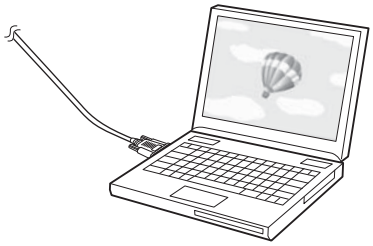

External speakers

Audio cable (commercially available)

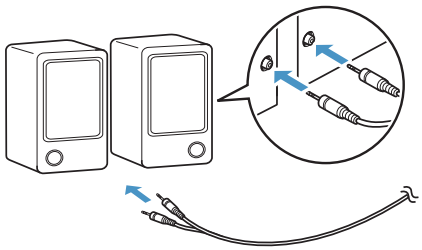

Microphone (commercially available)

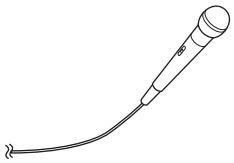

LAN device

LAN cable (commercially available)

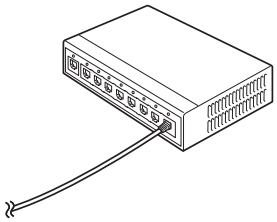

## Installation Procedure

Make sure to follow the steps below to install the setting plate. If these steps are not followed, the product could fall and cause personal injury or property damage.

### Warning

Do not use adhesives, lubricants, or oils to install or adjust the setting plate. If you use adhesives to prevent the screws from loosening or things such as lubricants or oils on the slide plate fixing part of the projector, the case may crack and cause the projector to fall, resulting in personal injury or property damage.

### Assemble the parts

**1** Connect the plate and frames (x2) and secure with the M4 x 12 mm bolts (x5) supplied

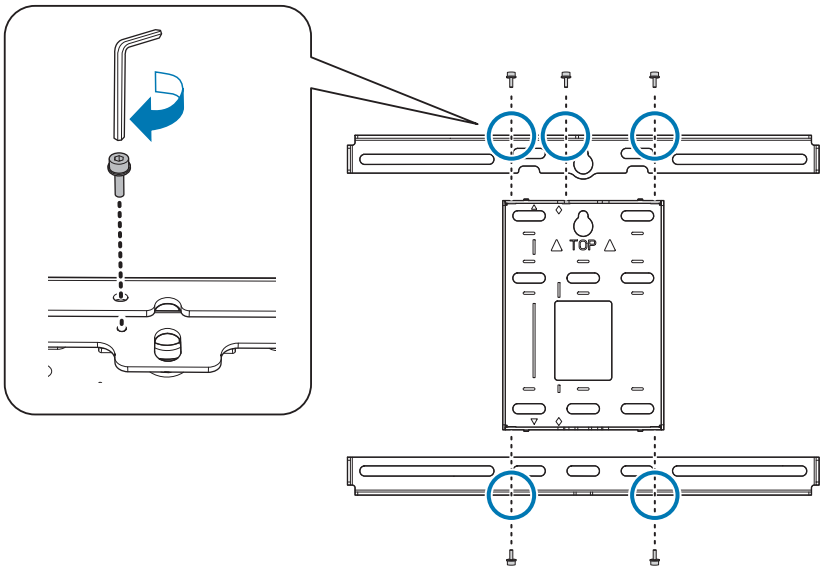

**2** Check that the 3-axis adjustment unit is aligned with the slide plate's standard position ( A ).

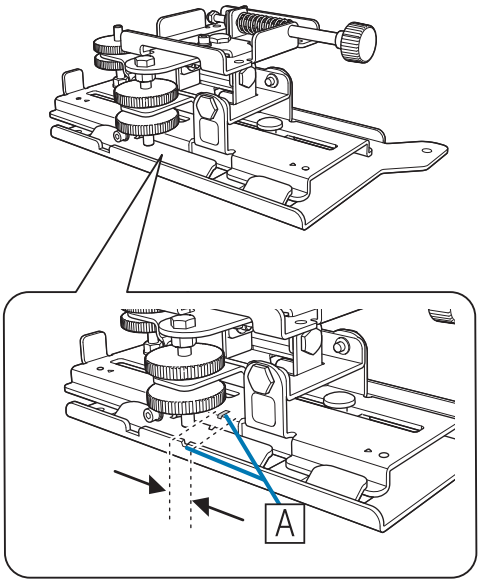


If the standard position ( A ) is not correct, loosen the M4 bolt and adjust the position of the slide plate. When you have finished making adjustments, tighten the bolt.

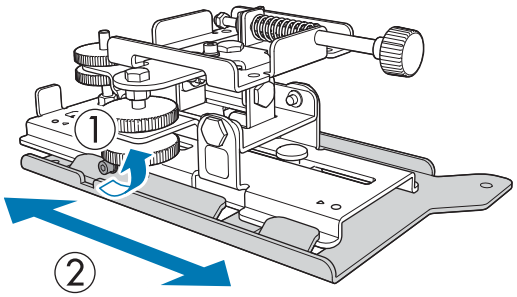


**3** Secure the 3-axis adjustment unit and the slide plate to the base of the projector with the M4 x 12 mm bolts (x4) supplied

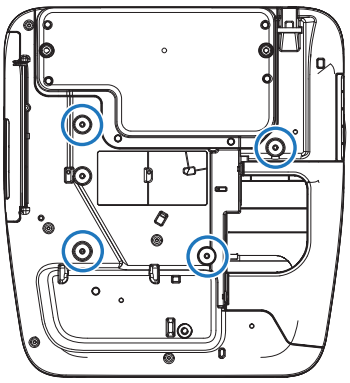

Bolt installation positions

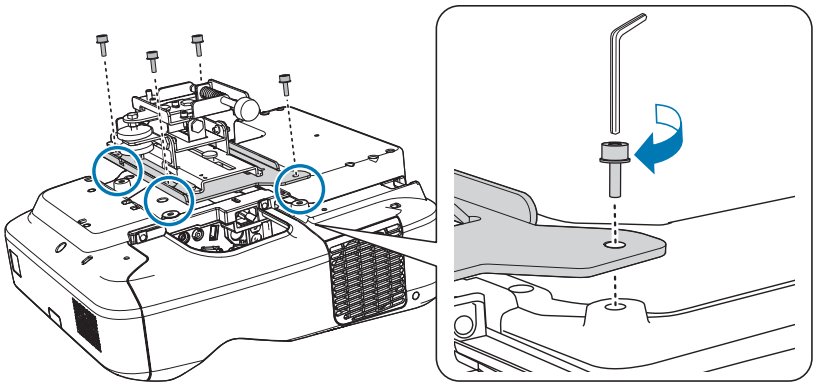

## Install the wall plate on the wall

### 1 Determine the projection position based on the projected image size

See the projection distance table to check the following values.

- Projected image size (S)
- Distance from the top of the projected image to the bottom wall plate installation screw hole (c)
- Distance from the top of the projected image to the wall plate temporary securing screw hole (d)

☛ "Projection Distance Table" p.12

Use the screw hole in the following figure as the temporary screw hole for the wall plate. The distance from the bottom wall plate installation screw hole to the temporary screw hole is 192.3 mm.

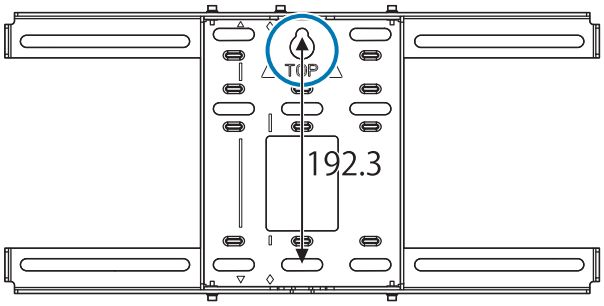


We recommend marking the following positions. These will be the basis for determining the mounting position of the wall plate.

- Position of the temporary screw hole ( 1 )
- Position of the bottom wall plate installation screw hole ( 2 )
- Center line ( 3 ) of the projected image

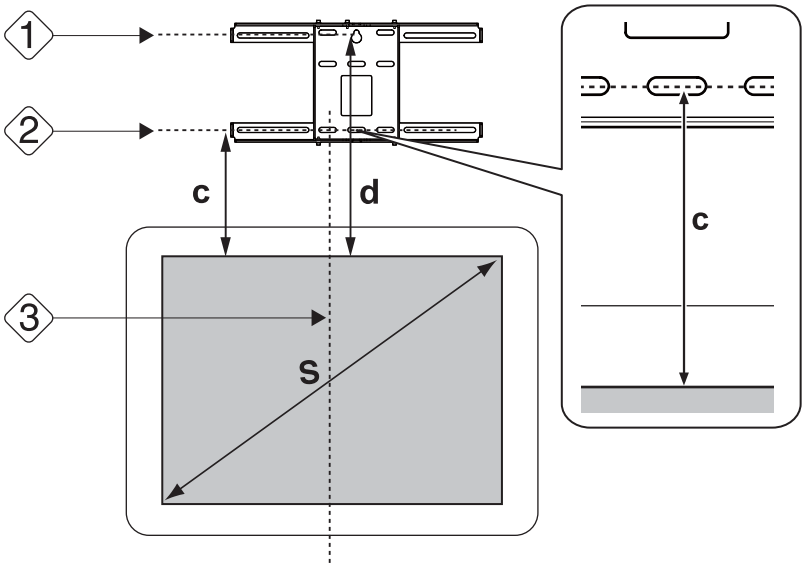

## 2 Attach the template sheet to the wall

- Match the center line ( 3 ) checked in step 1 to the **Image Center A** line on the template sheet.
  Confirm where the beams are within the wall, and shift the position left or right as necessary.
  (The position can be shifted horizontally left or right from the center line of the projection surface up to a maximum of 45 mm.)
- Match the height ( 1 ) and ( 2 ) checked in step 1 to the ★ lines on the template sheet.

[Unit: mm]

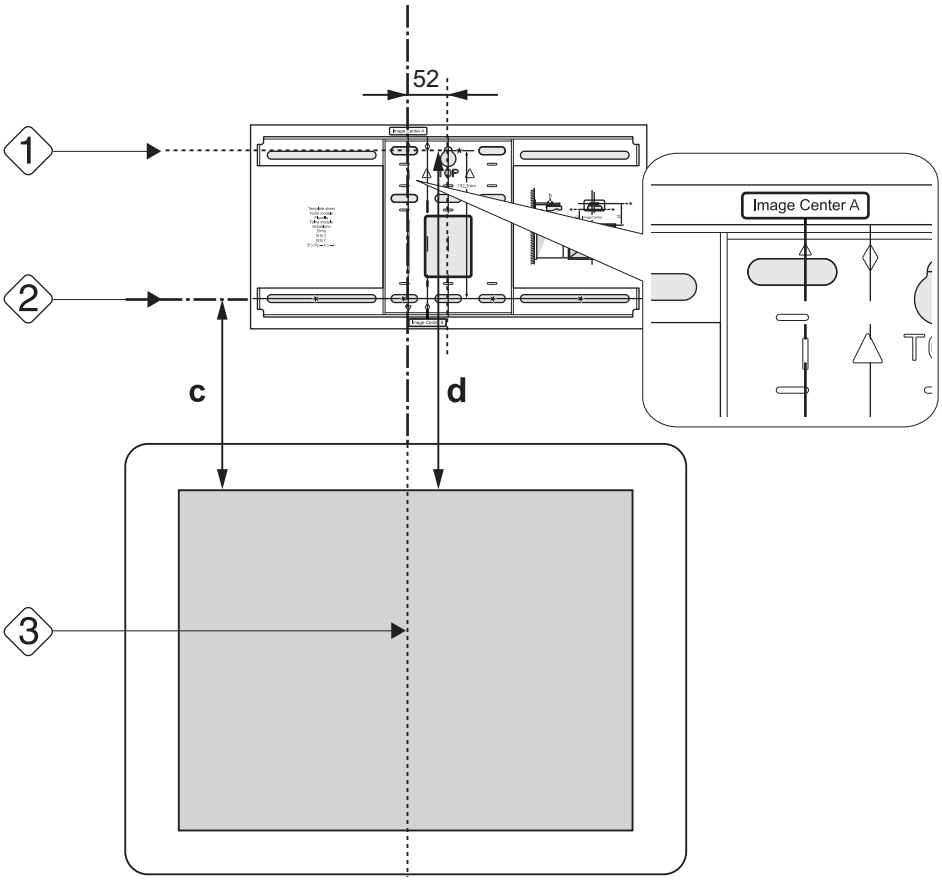


## 3 Drive a commercially available M10 screw into the position of the temporary screw hole for the wall plate

Leave a gap of 6 mm or more between the wall and the screw head.

## 4 Determine the positions for the mounting holes for the wall plate

From the screw holes shown in the figure below, secure at least four points for optimum balance.

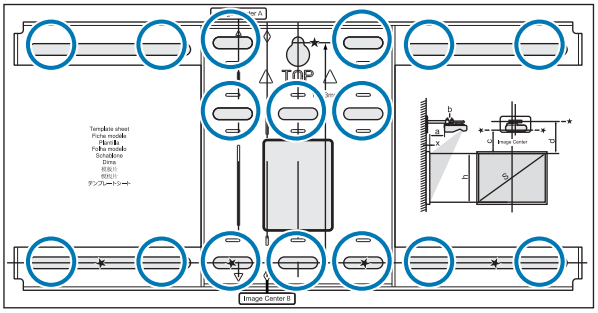

5 Drill the holes in the wall

Drill diameter: 10.5 mm
Pilot hole depth: 45 mm
Anchor hole depth: 40 mm

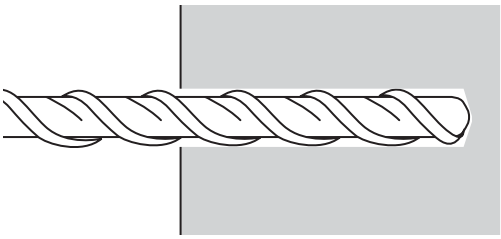

6 Remove the template sheet, and clean the concrete dust from the holes with a dust pump

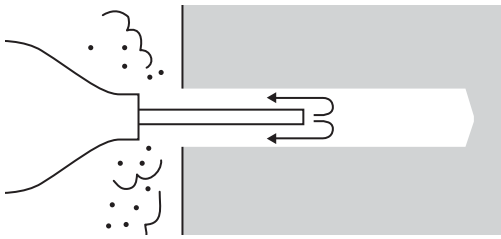

7 Position the wall plate on the wall and insert M10 x 60 mm commercially available anchors into the holes

Attach the nut and tap it with a hammer until the core touches the top of the anchor.

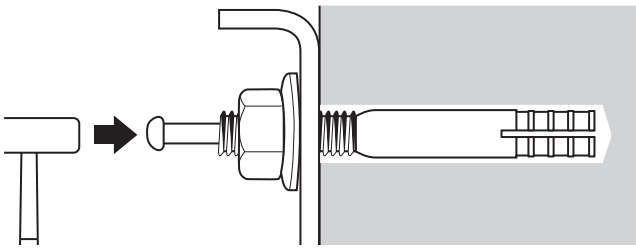

8 Tighten the nut with a commercially available spanner to secure the wall plate to the wall

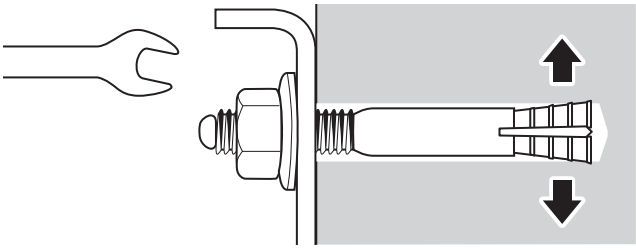

## Determine the projection distance, and then pass the cables through the setting plate

1 Check the following values in the projection distance table

- Numbers on the arm slide scale (b)
- Distance from surface of screen to wall (x)

☛ "Projection Distance Table" p.12

## 2 Loosen the M4 x 12 mm bolts (x2) and extend the arm slide on the setting plate

Align the slider with the combined distances of (b) and (x) that you checked in step 1.

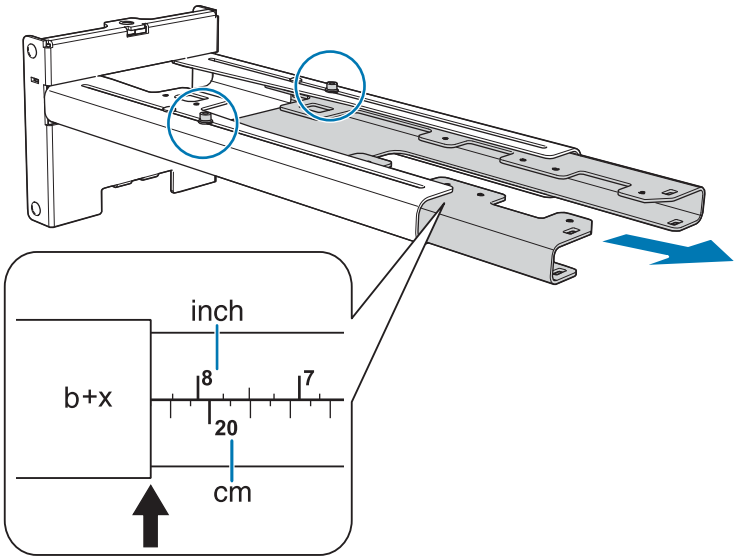


## 3 Route the necessary cables through the setting plate

See the following figure to route the cables so that the ends of the cables that connect to the projector are on the projector's interface side.

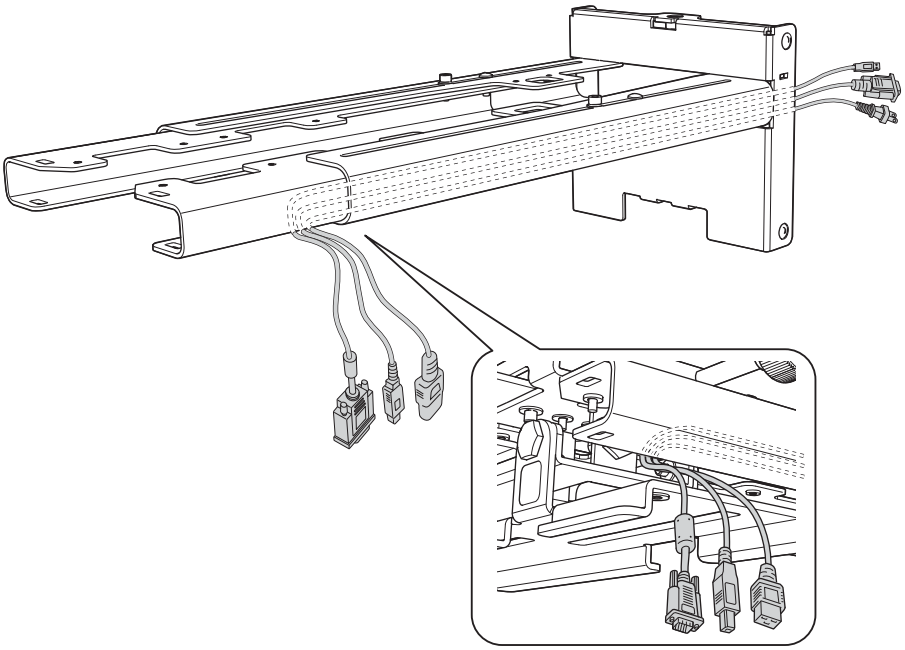

### Warning

Do not hang the rest of the cable over the setting plate. They could fall and cause an accident.

## Attaching the setting plate to the wall plate

### 1 Insert the hexagonal axis into the setting plate

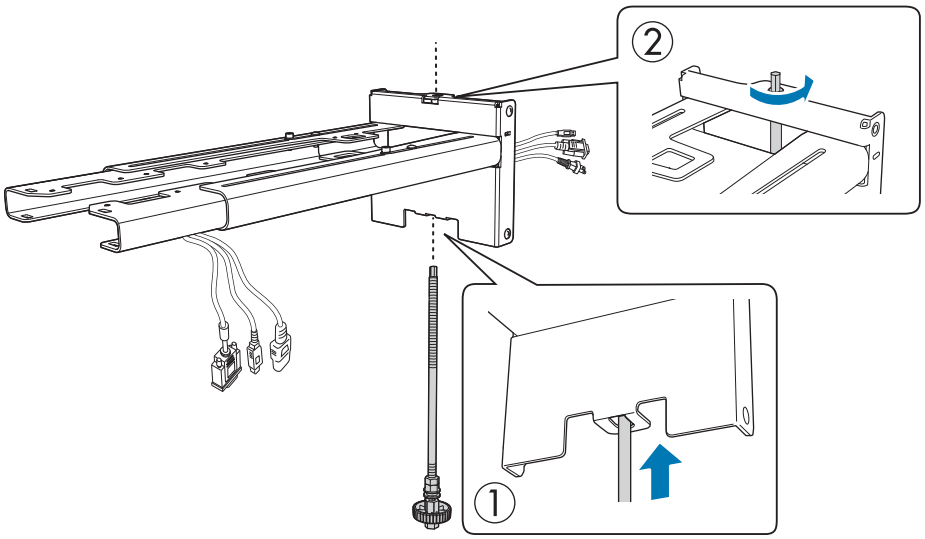


### 2 Mount the setting plate to the wall plate

Insert the top of the hexagonal axis into the wall plate, and then insert it into the slot at the bottom.

**Caution**

Take care not to trap the cables between the setting plate and wall plate.

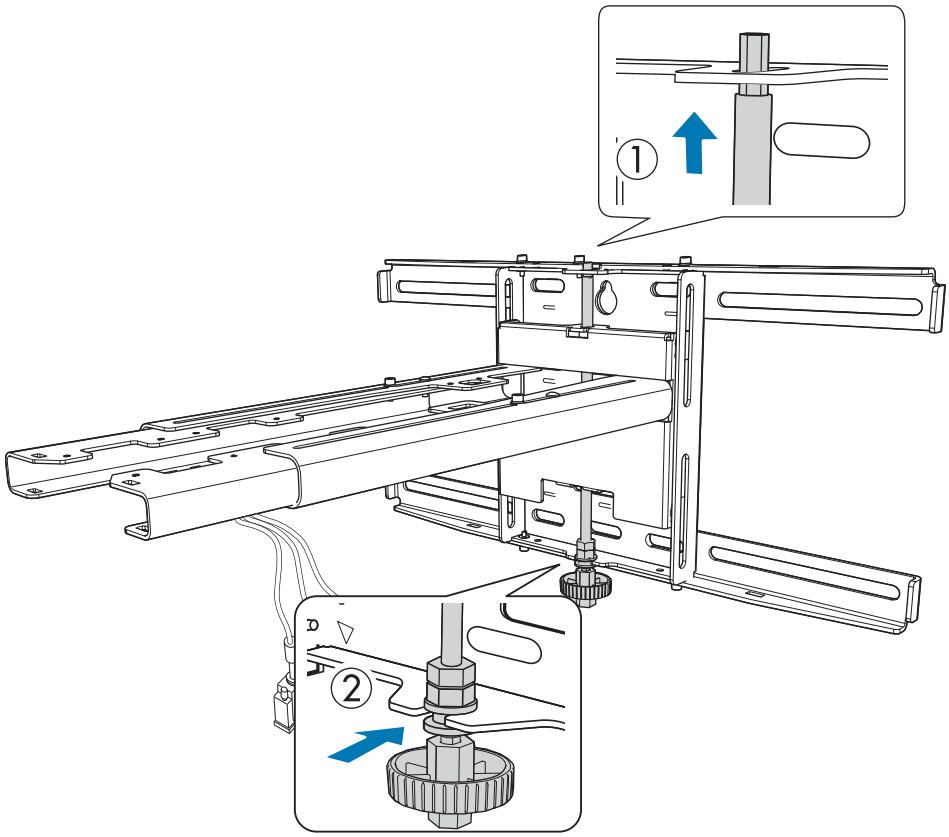

## 3 Secure the setting plate and the wall plate

Secure the supplied M6 screws (x3) with a commercially available No.3 cross-head screwdriver, and then lightly tighten the supplied M6 bolt (x1) with the spanner.

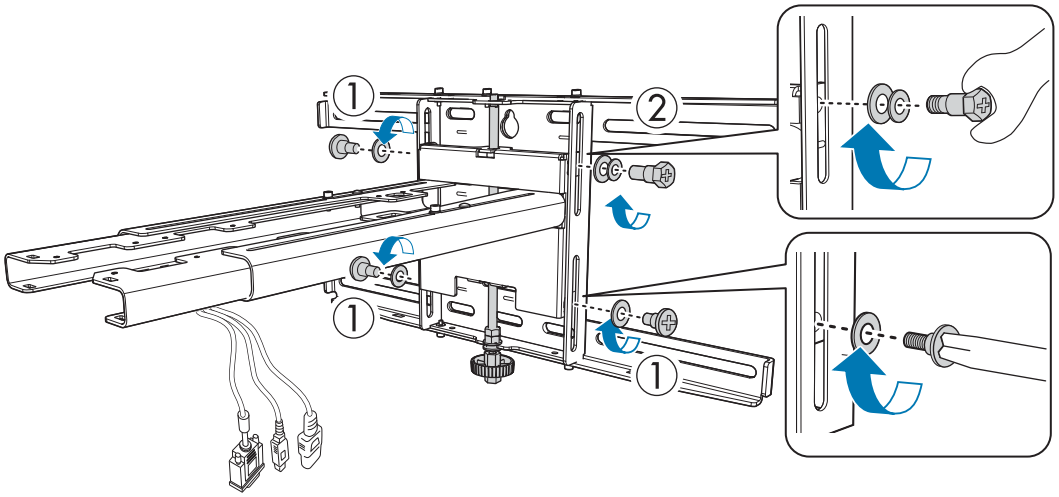


## 4 Adjust the vertical slide with the open-ended spanner, and align it with the standard position ( C )

- Tightening the hexagonal axis at the top ( A ) raises the setting plate, and loosening the axis lowers it.
- Tightening the M8 bolt at the bottom ( B ) lowers the setting plate, and loosening the bolt raises it. (You can also use a 17 mm socket wrench.)

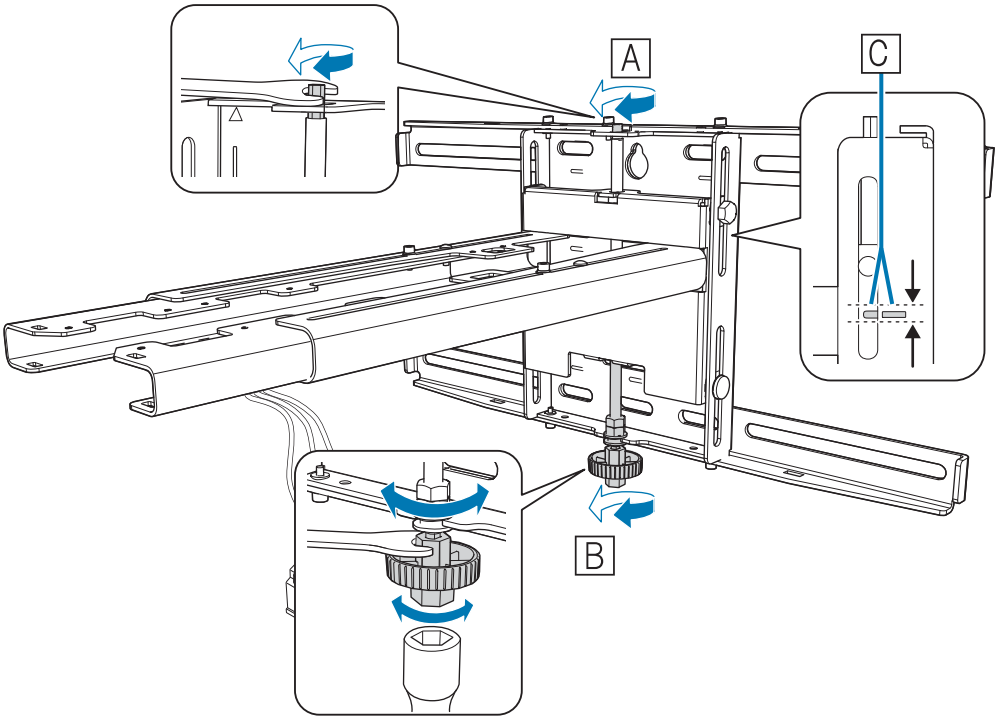

**5** Tighten the M6 bolt (x1) to fix the setting plate in position

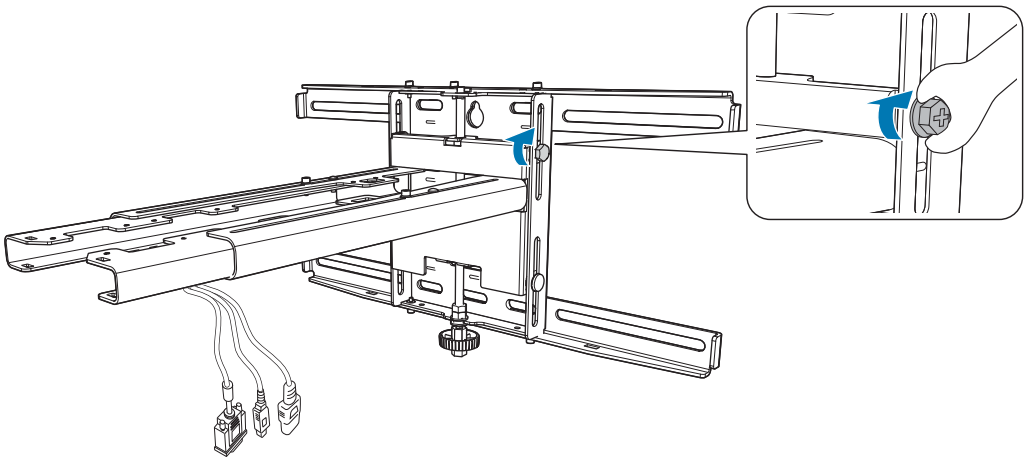

## Securing the projector to the setting plate

**1** Loosen the screws (x2) and remove the cable cover from the projector

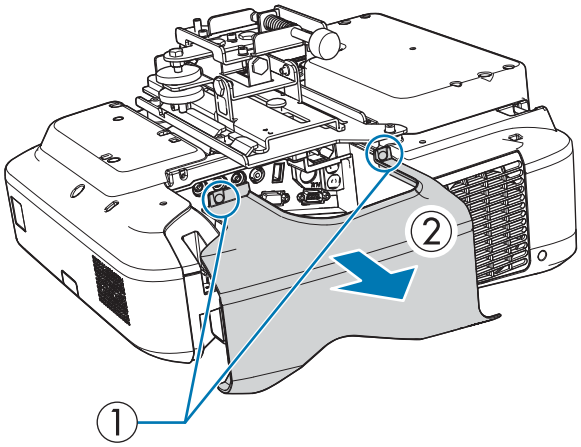

## 2 Attach the 3-axis adjustment unit to the setting plate with the M4 x 12 mm bolts (x4) supplied

- When a projected image is smaller than 75 inches: Mount the unit at the ◯ stamp ( A ).
- When a projected image is larger than 75 inches: Mount the unit at the ◯◯ stamp ( B ).

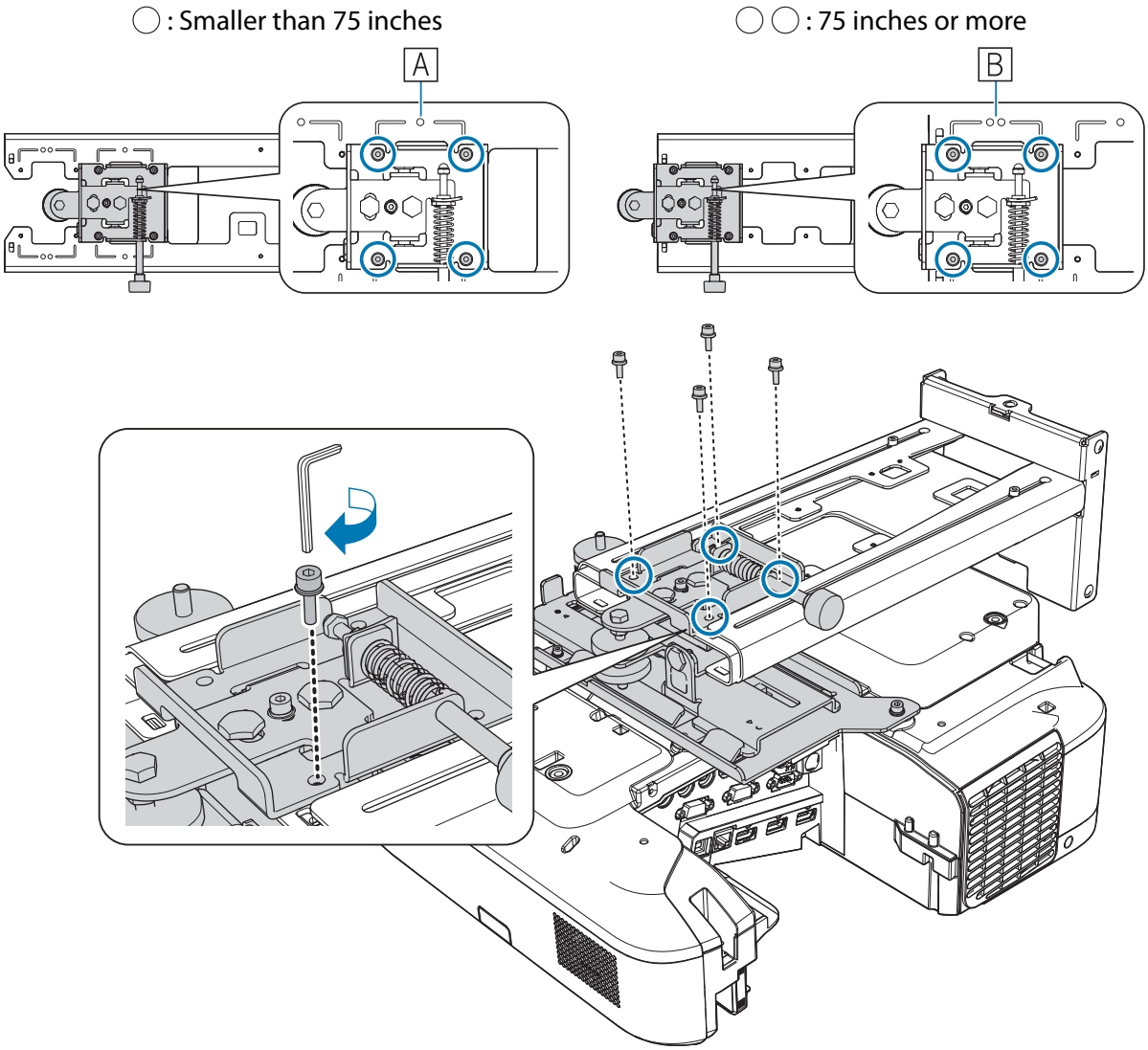

## 3 Connect the cables to the projector

Connect the power cord last.

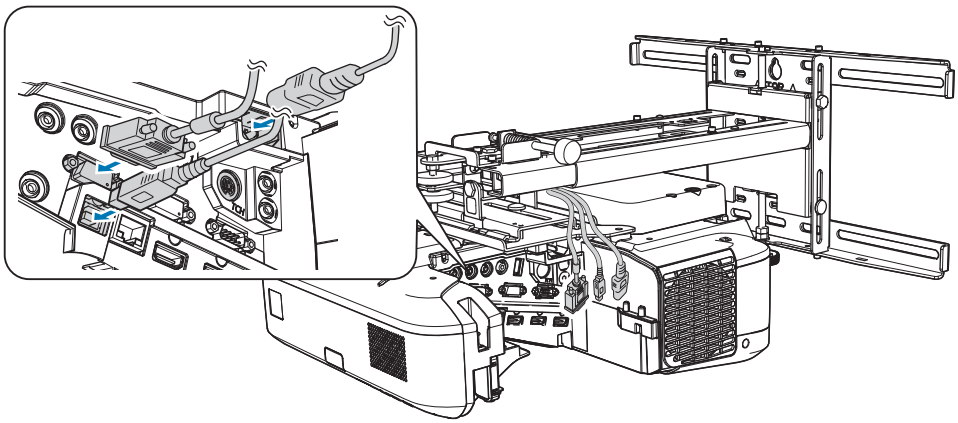

Use commercially available M4 screws to secure peripheral devices and accessories such as external tuners to the screw holes in the following figure.

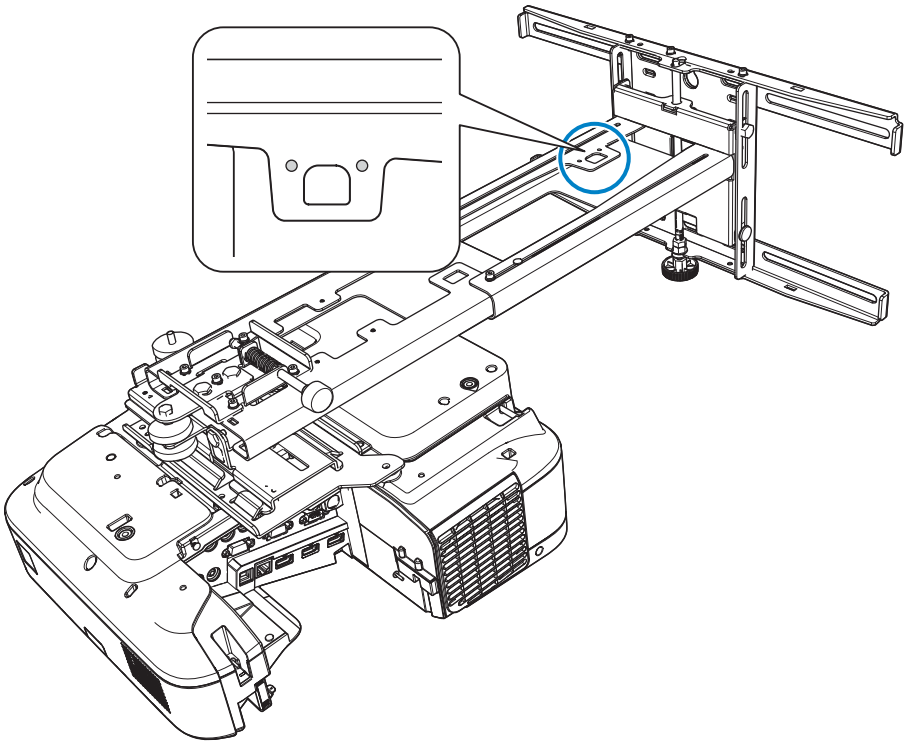

Install the optional wireless LAN module in the wireless LAN unit module slot.

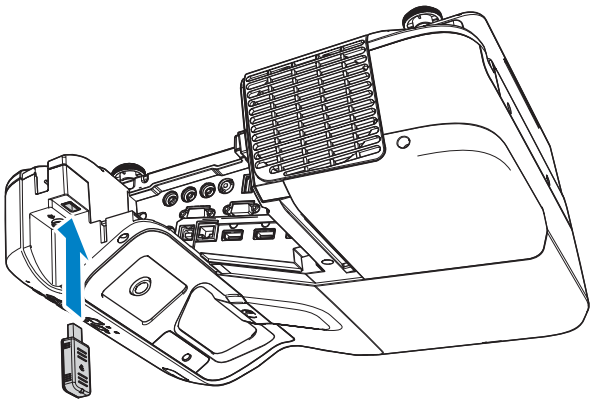

## Adjusting the Position of the Projector

- Do not make adjustments using the projector's Keystone function. Doing so may result in a reduction in image quality.
- When setting up multiple projectors using the batch setup function, perform the batch setup before adjusting the projected image.

☛ "Batch Setup Function" p.56

**1** Press the [Power] button on the remote control or the control panel to turn on the projector

Using the Remote Control

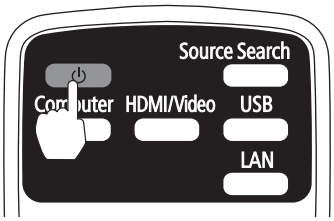


Using the Control Panel

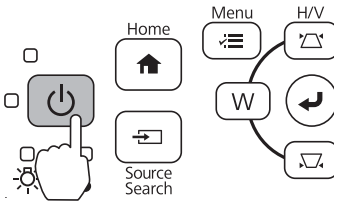


### Caution

While projecting, do not put your face or hands near the air exhaust vent, and do not place objects that may become warped or damaged by heat near the vent. Hot air from the air exhaust vent could cause burns, warping, or accidents to occur.

**2** Open the air filter cover, and then adjust the focus using the focus lever

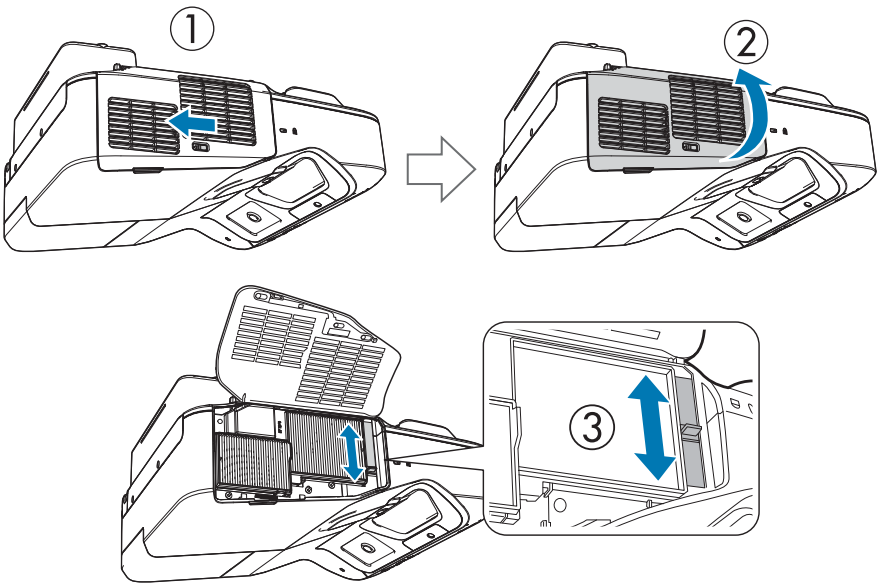


Fine-tune the focus later.

After you finish making adjustments, close the air filter cover.

You can change the display language from **Language** on the **Extended** menu.

☛ Projector's *User's Guide* - Projector menu

## 3 Change the aspect ratio of the projected image (only when necessary)

Project images from a connected device, and then press the [Aspect] button on the remote control.

Each time you press the button, the aspect name is displayed on the screen and the aspect ratio changes.

Using the Remote Control

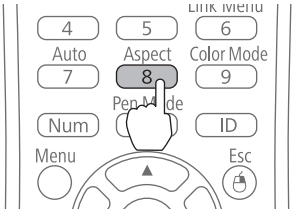

- For details on connecting to devices and projecting images, see the *Quick Start Guide*.
- The aspect ratio does not change when no images are being projected from the connected device.
- You can also change the aspect ratio from **Aspect** from the **Signal** menu.

☛ Projector's *User's Guide* - Projector menu

## 4 Press the projector's [Menu] button.

Using the Remote Control

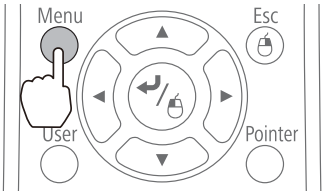


Using the Control Panel

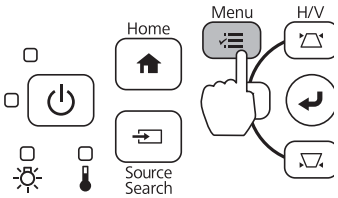


## 5 Select **Installation Guide** from **Settings**

When using EB-685W/EB-675W, the aspect ratio selection screen is displayed. Select **16:10** or **4:3** depending on the image you want to project.

The guidance screen is displayed.

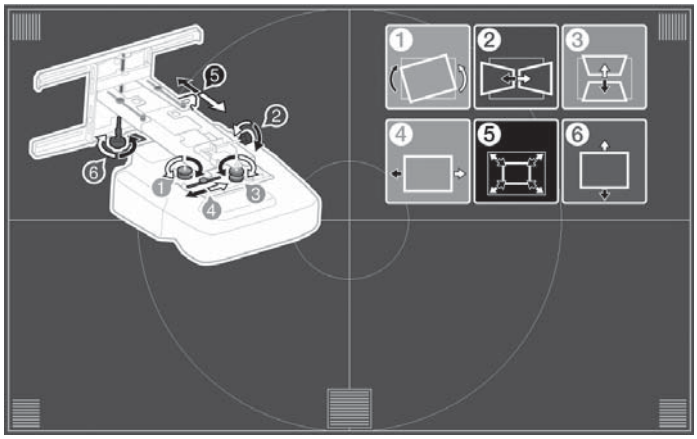

**6** After loosening the adjustment dial at the bottom, adjust the horizontal roll using the adjustment dial at the top.

> Repeat steps 6 to 11 as necessary.

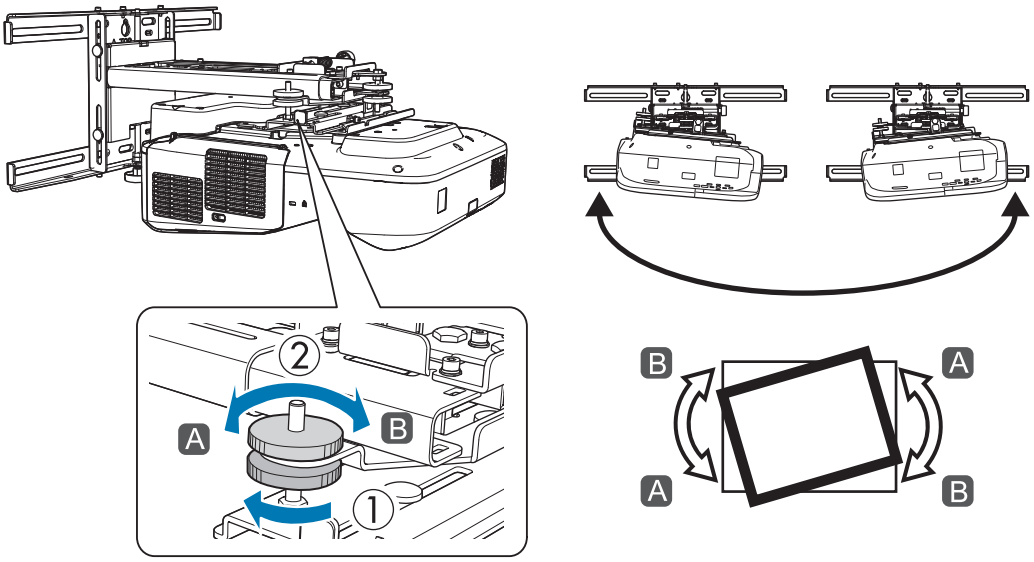


After you finish making adjustments, tighten the adjustment dial at the bottom.

**7** Loosen the M4 screw (x1) with the hexagon wrench, and then adjust the horizontal rotation with the adjustment dial

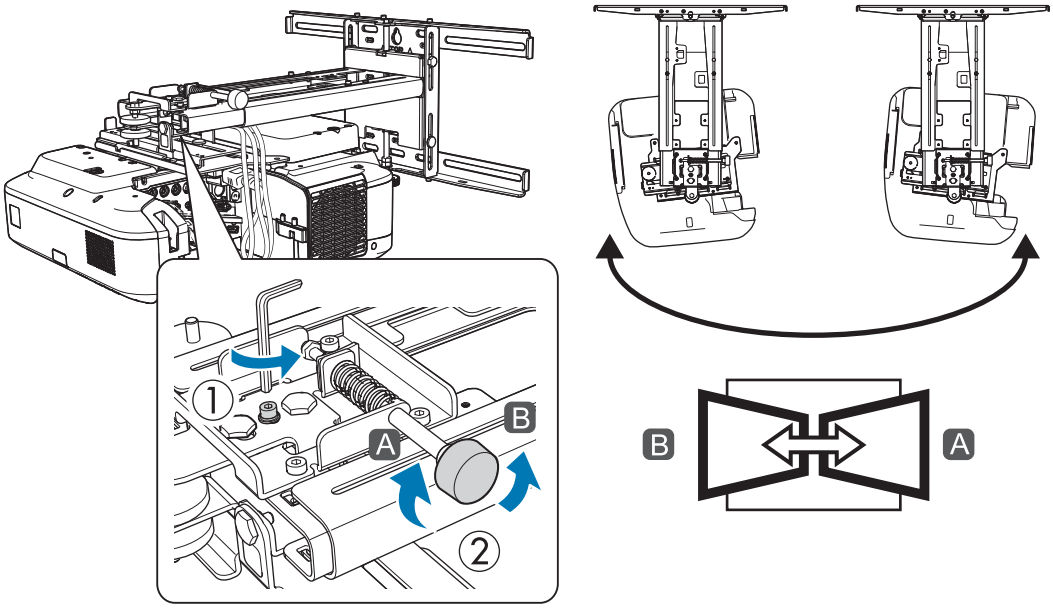


After you finish making adjustments, tighten the M4 screws that you loosened.

**8** After loosening the adjustment dial at the bottom, adjust the vertical tilt using the adjustment dial at the top.

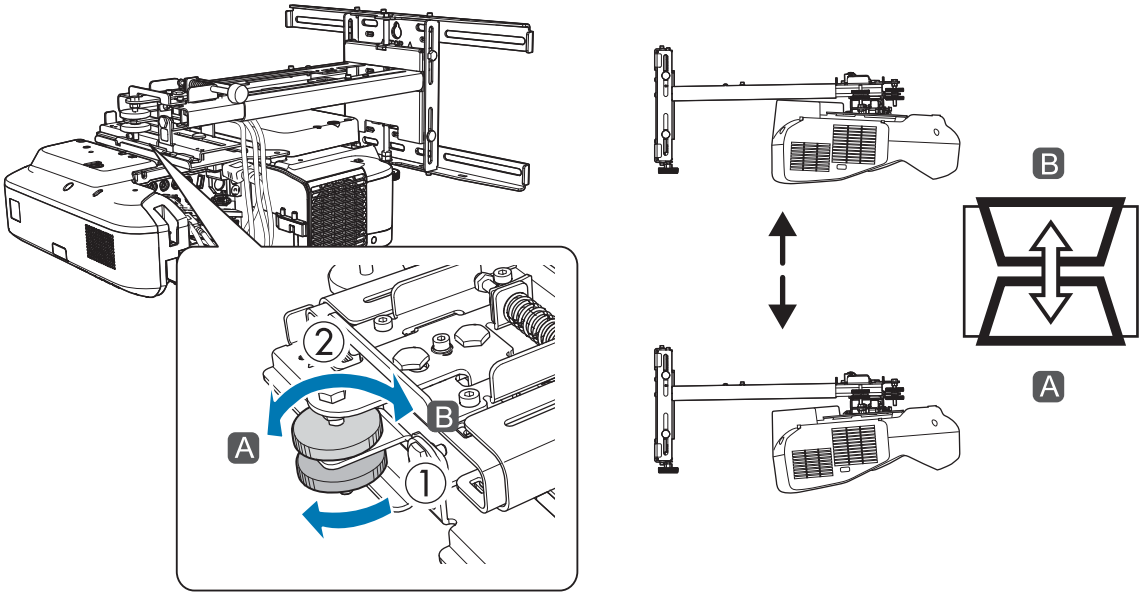


After you finish making adjustments, tighten the adjustment dial at the bottom.

**9** Loosen the M4 bolt with the hexagon wrench, and then adjust the horizontal slide

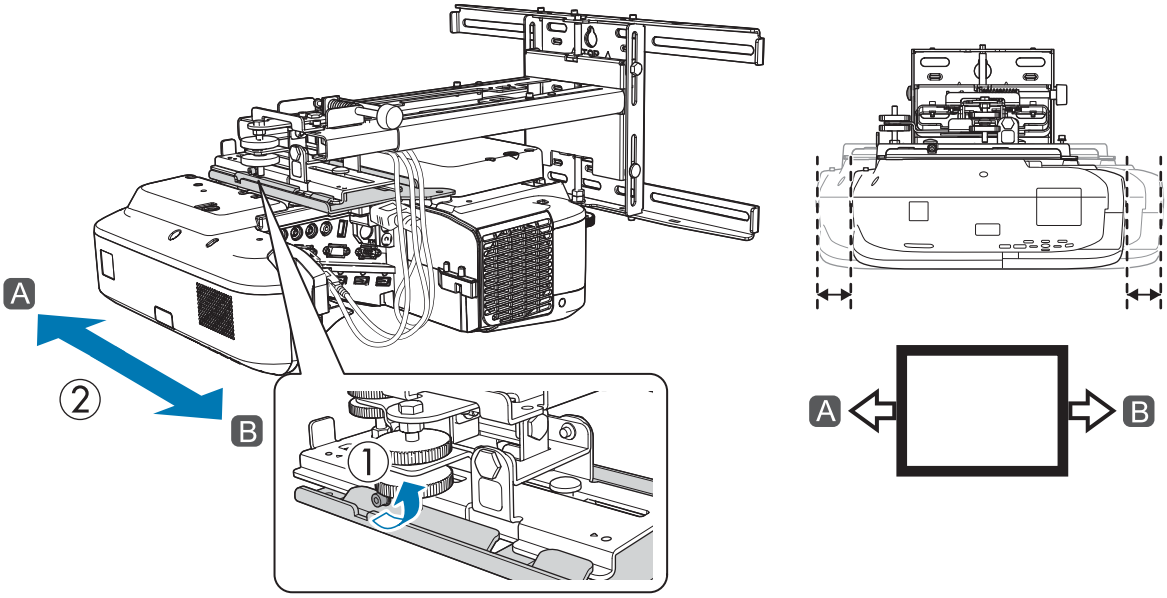


After you finish making adjustments, tighten the M4 bolt that you loosened.

## 10 Loosen the M4 bolts (x2) with the hexagon wrench, and then adjust the forward/backward slide

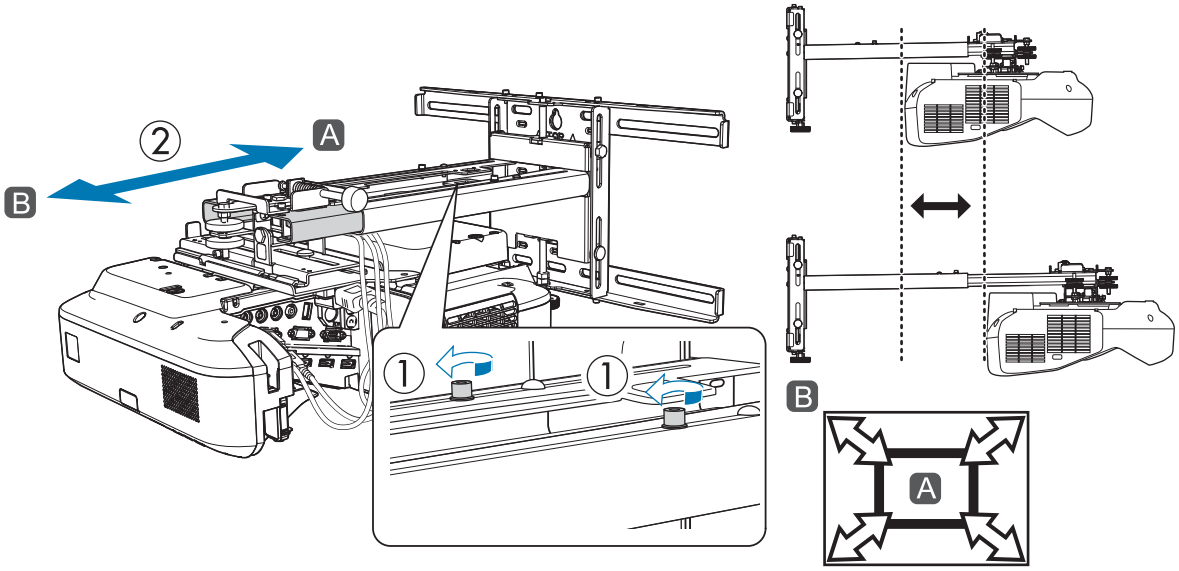


After you finish making adjustments, tighten the M4 bolts that you loosened.

## 11 Loosen the M6 bolt (x1) with the open-ended spanner, and then adjust the vertical slide

Adjust the vertical slide with the hexagonal axis at the top or the bottom.

- Tightening the hexagonal axis at the top raises the setting plate, and loosening the axis lowers it.
- Tightening the M8 bolt at the bottom lowers the setting plate, and loosening the bolt raises it. (You can also use a 17 mm socket wrench.)

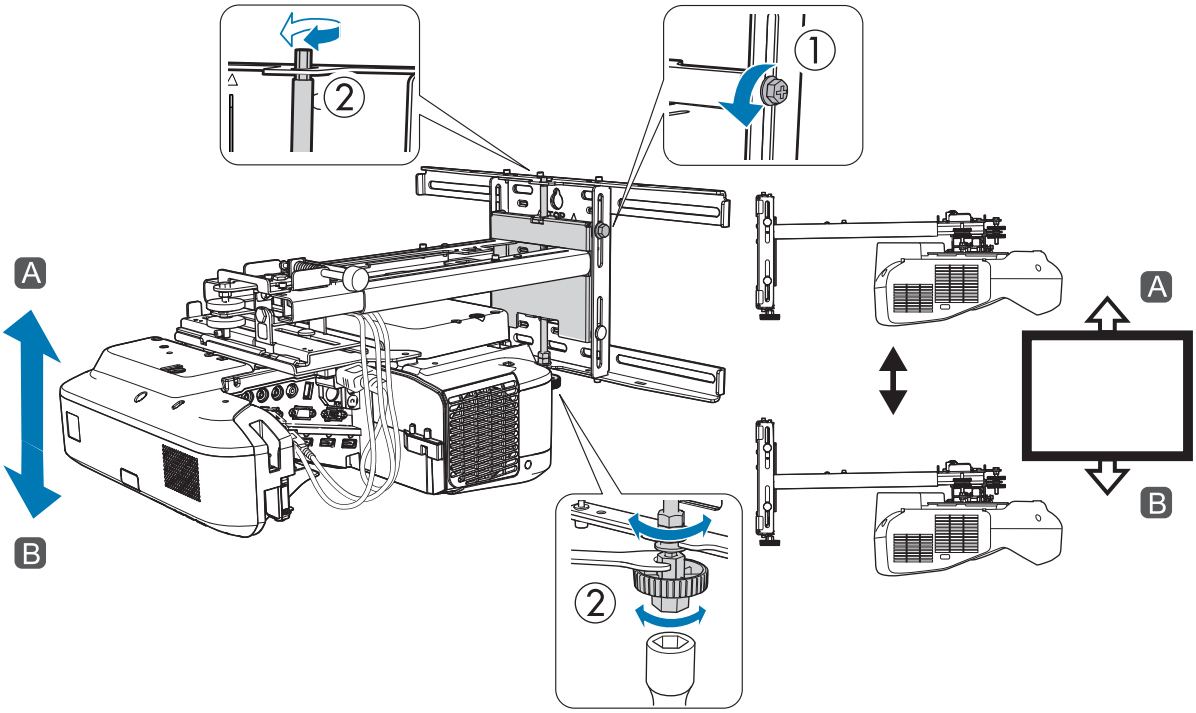


After you finish making adjustments, tighten the M6 bolt that you loosened.

**12** Make sure that all of the bolts that you loosened in steps 6 to 11 are securely tightened

> ⚠ Warning
>
> Tighten all bolts and screws firmly. Otherwise, the product may fall and cause personal injury or property damage.

**13** Adjust the focus to match the focus in the following figure ( A )

Open the air filter cover, and then adjust the focus.

When ( A ) is in focus, check the ( B ) areas. If any of the ( B ) areas are out of focus, adjust the focus until the ( B ) areas are uniform.

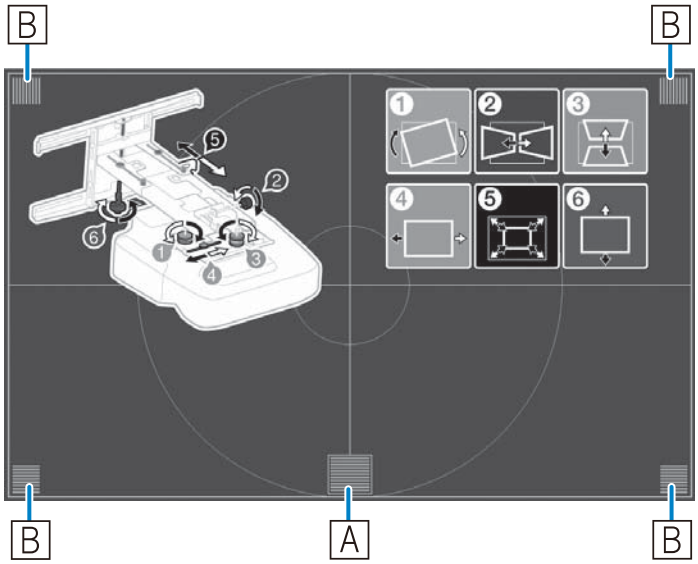


After you finish making adjustments, close the air filter cover.

**14** Press the [Esc] button on the remote control or the control panel to remove the guidance screen

## Arc Correction

When projecting onto a curved screen, use Arc Correction to adjust distortion in the projected image.

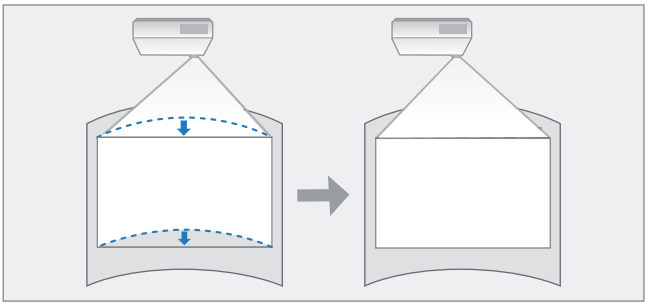

**1** Turn on the projector, and then press the [Menu] button

Using the Remote Control

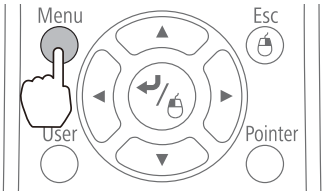


Using the Control Panel

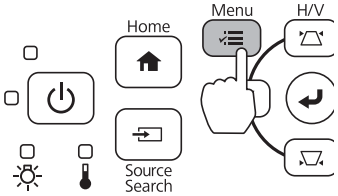


**2** Select **Geometry Correction** from **Settings**

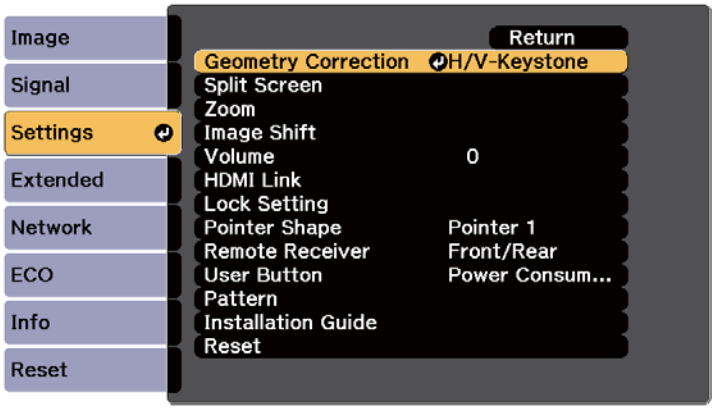


**3** Select **Arc Correction**

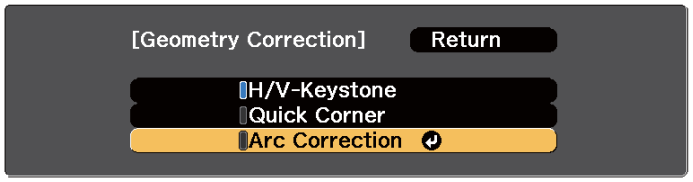


**4** Select **Arc Correction**

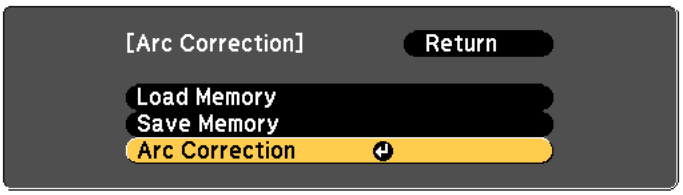


**5** Select the side you want to correct

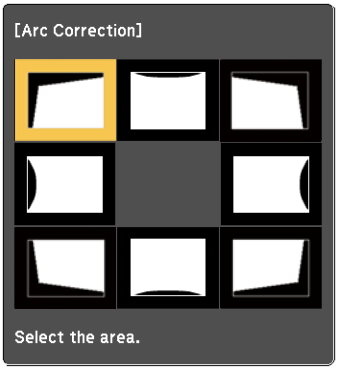

## 6 Correct the selected side

If the message **"Cannot adjust any further."**is displayed while adjusting, you cannot adjust the shape any further in the direction indicated by the gray triangle.

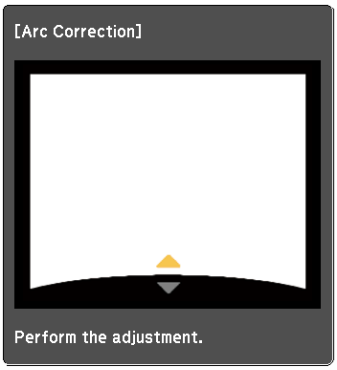


## 7 Repeat steps 5 and 6 as needed to adjust any remaining sides

## Attaching the Covers

### 1 Attach the wall plate covers

Install the right cover first.

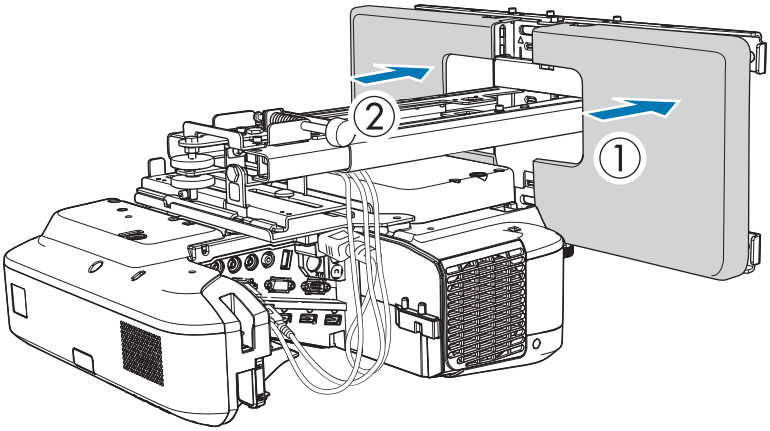


- Depending on the cable configurations, you may need to cut notches ( A ) in the wall plate covers to route the cables. Perform deburring on the cut sides to smooth off any sharp edges.

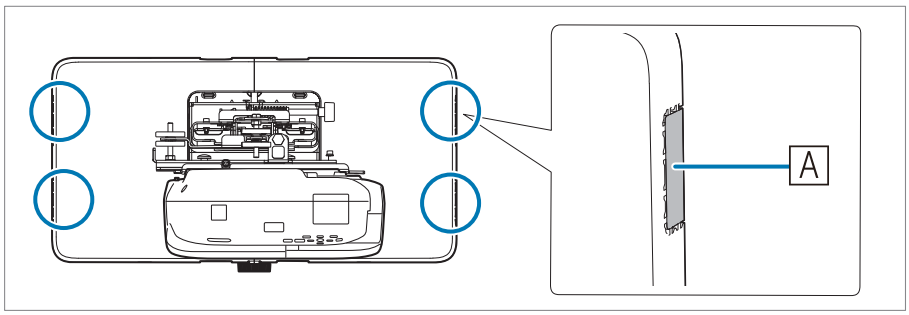


Make sure you do not damage the cables when routing them through the cut holes.

Also, make sure you operate the cutter safely.

- When removing the wall plate cover, press the tabs at the top and bottom of the rear of the wall plate cover with a hexagonal wrench, and pull it forward.

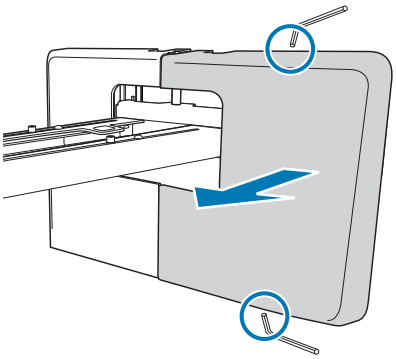

## 2 Fit the end cap to the setting plate

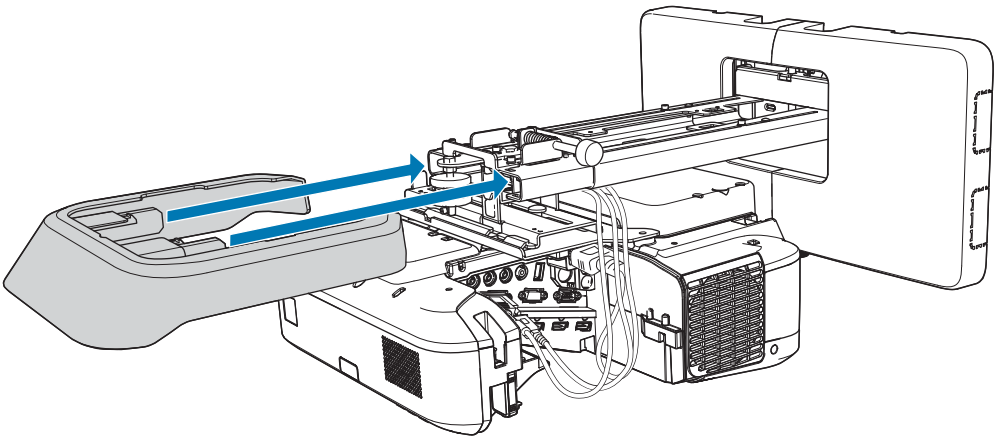

If you are concerned about the groove in the arm, stick the supplied masking sticker.

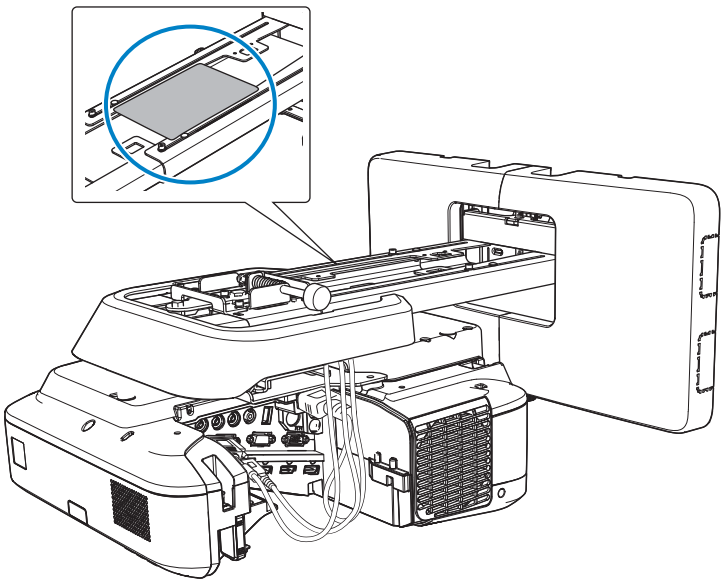

## 3 Attach the cable cover to the projector, and then secure it with the screws (x2)

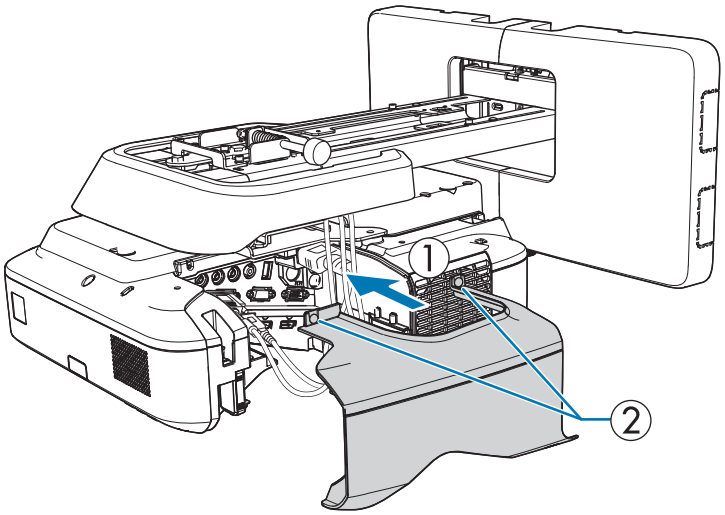

## Caution

Only a specialist should remove or reinstall the projector, including for maintenance and repairs. See the projector's *User's Guide* for instructions on maintenance and repairs.

## Warning

- Never loosen the bolts and nuts after installation. Confirm that the screws have not become loose on a regular basis. If you find any loose screws, tighten them firmly. Otherwise, the product may fall and cause personal injury or property damage.
- Do not hang on this product or hang a heavy object on this product. If this product falls, it could cause death or personal injury.

# Installing Multiple Projectors in Parallel (Multi-Projection)

By installing multiple projectors in parallel, you can project one, large image (Multi-Projection).

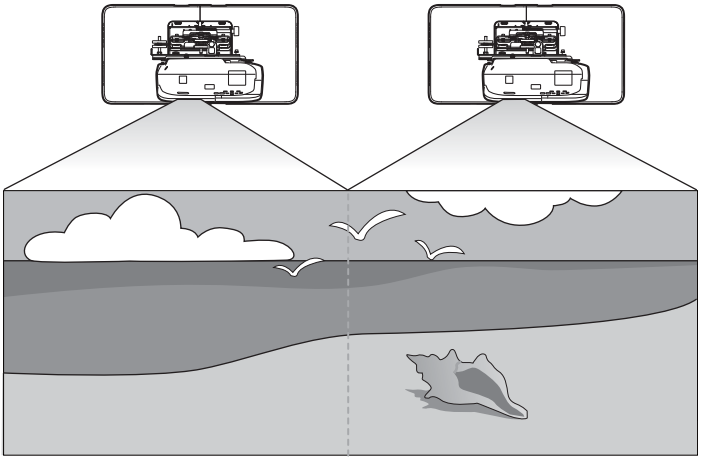

Check the following when installing multiple projectors in parallel.(☛"Installation Work Flow" p.6)

When projecting the screen from one computer, you need to make the following preparations. See the documentation provided with your computer to check how to make settings.

- Connect a cable from one computer to each projector (the computer needs two image output ports)
- Set to output images to multiple screens from one computer

## Multi-Projection settings

Follow the steps below when using the Multi-Projection function.

1. Setting the Projector ID (☛ p.51)
2. Adjusting the Image in Multi-Projection (☛ p.54)

### Setting the Projector ID

**1** Turn on the projector, and then press the [Menu] button

Using the Remote Control

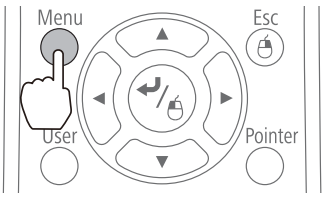


Using the Control Panel

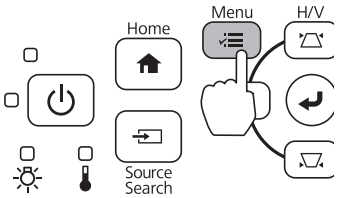

**2** Select **Multi-Projection** from **Extended**

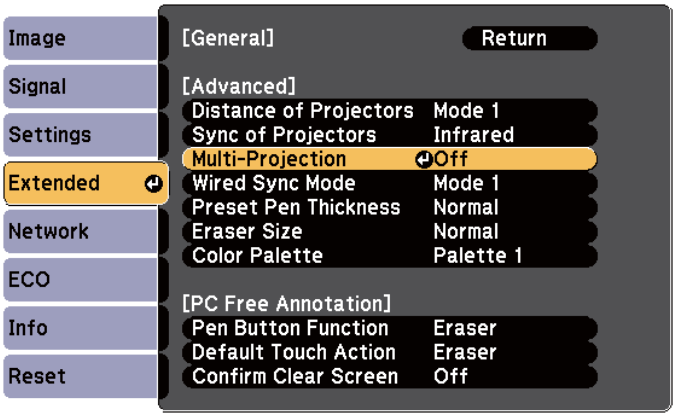


**3** Select **Projector ID**

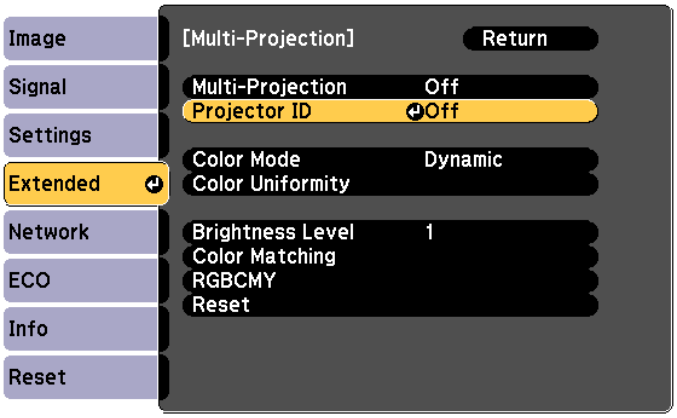


**4** Select the ID number for the target projector

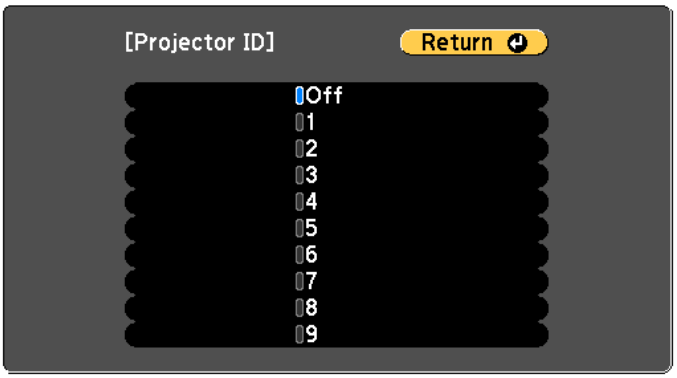


**5** Press the [Menu] button to close the menu

Repeat steps 1 to 5 for the remaining projectors

**6** Point the remote control at the projector you want to operate, and then press the [ID] button

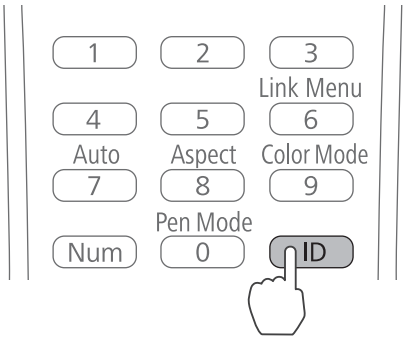


The ID set for the projector is displayed on the projected screen. The display turns off after approximately three seconds.

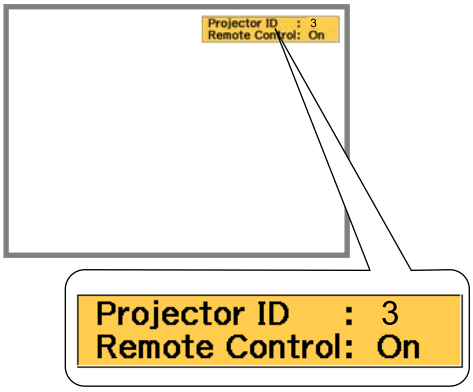


**7** While holding down the [ID] button, press the button with the same number as the projector ID for the projector you want to operate

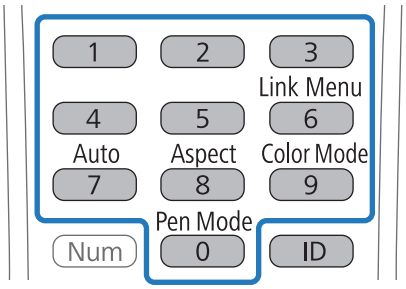


Remote control operations for the projector with the selected ID are enabled.

## 8 Press the [ID] button and check the ID setting

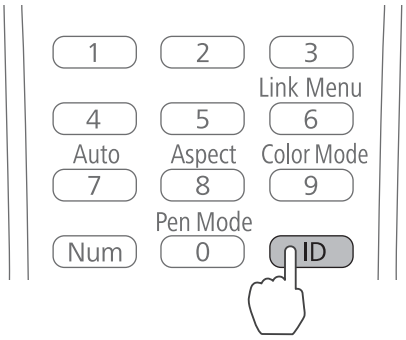


The following is displayed.

- Remote control operation: **On** is displayed: You can operate the projector currently being operated.
- Remote control operation: **Off** is displayed: You cannot operate the projector with the remote control. Repeat the procedure above to enable remote control operations.

- Each time the projector is turned on, you need to select the projector ID for the projector you want to operate. When the projector is turned on, the ID set for the remote control is 0.
- When **Projector ID** is set to **Off**, you can operate the projector using the remote control regardless of the ID setting selected using the remote control.
- When the remote control ID is set to 0, you can operate all of the projectors regardless of the projector ID setting.

## Adjusting the Image in Multi-Projection

- Check that projector position adjustment is complete

  ☛"Adjusting the Position of the Projector" p.40
- If you are concerned about the alignment between images being projected in multi-projection, try performing Arc Correction.

  ☛"Arc Correction" p.45

## 1 Turn on the projector, and then press the [Menu] button

Using the Remote Control

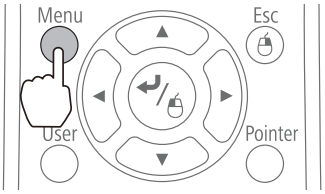


Using the Control Panel

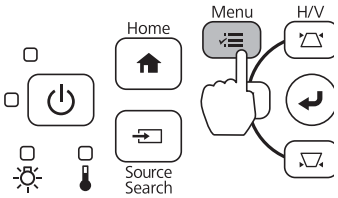

## 2 Select **Multi-Projection** from **Extended**

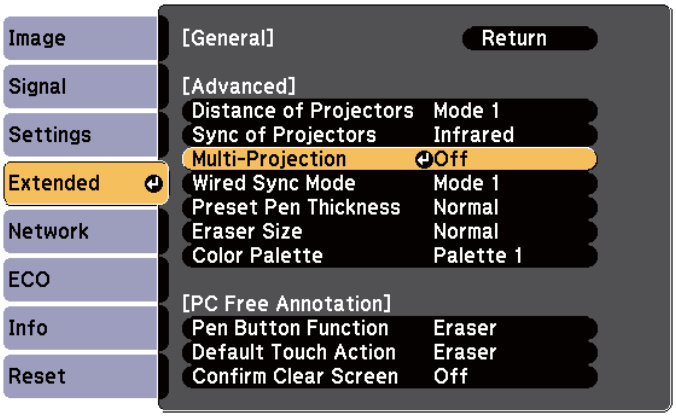


## 3 Set **Multi-Projection** to **On**

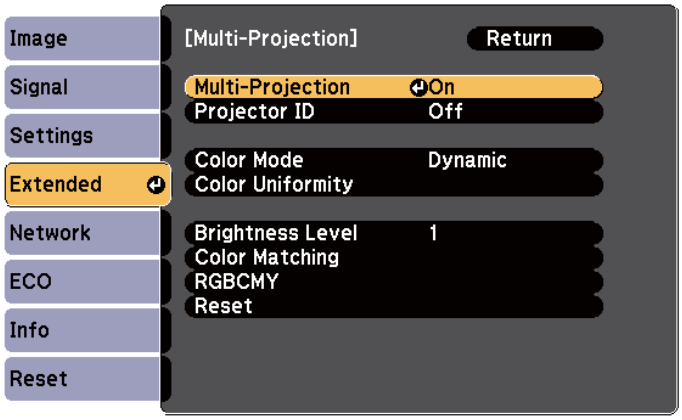


Press the [Esc] button to return to the previous screen.

## 4 Make each setting

| | |
|---|---|
| **Color Mode** | Set the same item for each projector. |
| **Color Uniformity** | Adjust the color balance for the entire screen (only when necessary). |
| **Brightness Level** | If the brightness for each lamp is different, adjust the lamp brightness from level 1 to 5. Adjust the darkest lamp as the standard. This is only available when **Power Consumption** is set to **Normal** from the **ECO** menu. |
| **Color Matching** | Adjust the color and brightness in gradations from all white to all black. |

# Batch Setup Function

After making the projector's menu settings for one projector, you can copy the settings to other projectors (batch setup function). The batch setup function is only for projectors with the same model number.

Use one of the following methods.

- Setup using a USB flash drive.
- Setup by connecting the computer and projector with a USB cable.
- Setup using EasyMP Network Updater.

This guide explains the USB flash drive and the USB cable methods.

- The following menu settings are not copied by the batch setup function.
  - Network menu settings (except for the Notification menu and the Others menu)
  - Lamp Hours and Status from the Info menu
- Perform batch setup before adjusting the position of the projectors. Adjustment values for the projected image, such as Keystone, are copied by the batch setup function. If batch setup is performed after adjusting the position of the projectors, the adjustments you made may change.
- By using the batch setup function, the registered User's Logo is copied to the other projectors. Do not register confidential information and so on as the User's Logo.

## Caution

Performing batch setup is the customers responsibility. If batch setup fails due to a power failure, communication error, and so on, the customer is responsible for any repair costs incurred.

## Setup Using a USB flash drive

This section explains how to perform batch setup using a USB flash drive.

- Use a FAT format USB flash drive.
- The batch setup function cannot be used by USB flash drives that incorporate security functions. Use a USB flash drive that does not incorporate security functions.
- The batch setup function cannot be used by USB card readers or USB hard disks.

### Saving settings to the USB flash drive

**1** Disconnect the power cord from the projector, and check that all of the projector's indicators have turned off

**2** Connect the USB flash drive to the projector's USB-A port

- Connect the USB flash drive directly to the projector. If the USB flash drive is connected to the projector through a USB hub, the settings may not be saved correctly.
- Connect an empty USB flash drive. If the USB flash drive contains data other than the batch setup file, the settings may not be saved correctly.
- If you have saved a batch setup file from another projector to the USB flash drive, delete the file or change the file name. The batch setup function cannot overwrite a batch setup file.
- The file name for the batch setup file is PJCONFDATA.bin. If you need to change the file name, add text after PJCONFDATA. If you change the PJCONFDATA section of the file name, the projector may not be able to recognize the file correctly.
- You can only use single-byte characters for the file name.

**3** While holding down the [Esc] button on the remote control or the control panel, connect the power cord to the projector

The status indicator and the power indicator turn blue, and the lamp indicator and the temperature indicator turn orange.

When all of the projector's indicators turn on, release the [Esc] button.

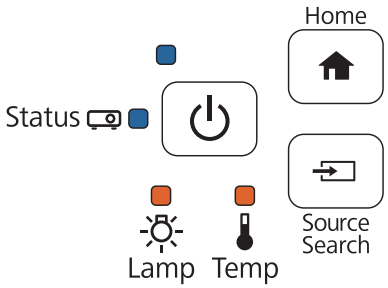


When all of the indicators start flashing, the batch setup file is being written.

**Caution**

- Do not disconnect the power cord from the projector while the file is being written. If the power cord is disconnected, the projector may not start correctly.
- Do not disconnect the USB flash drive from the projector while the file is being written. If the USB flash drive is disconnected, the projector may not start correctly.

When writing completes normally, the projector turns off, and only the power indicator is lit blue.

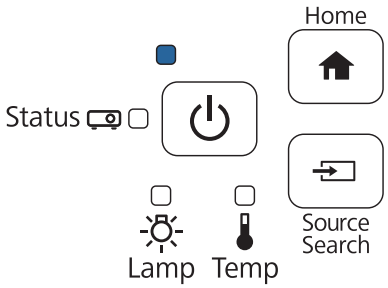


When the power turns off, remove the USB flash drive.

## Copying saved settings to other projectors

1. Disconnect the power cord from the projector, and check that all of the projector's indicators have turned off

2. Connect the USB flash drive containing the saved batch setup file to the projector's USB-A port

- When the USB flash drive contains 1 to 3 types of batch setup files, the file for the same model number is copied to the projector. If there are multiple files for a projector with the same model number, the settings may not be copied correctly.
- When there are four or more types of batch setup files on the USB flash drive, the settings may not be copied correctly.
- Do not store any data except for the batch setup file on the USB flash drive. If the USB flash drive contains data other than the batch setup file, the settings may not be reflected copied correctly.

**3** While holding down the [Menu] button on the remote control or the control panel, connect the power cord to the projector

The status indicator and the power indicator turn blue, and the lamp indicator and the temperature indicator turn orange.

When all of the projector's indicators turn on, release the [Menu] button. The indicators turn on for approximately 75 seconds.

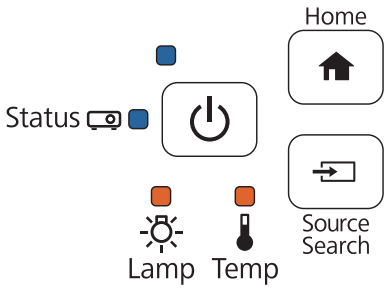


When all of the indicators start flashing, the settings are being written.

**Caution**

- Do not disconnect the power cord from the projector while the settings are being written. If the power cord is disconnected, the projector may not start correctly.
- Do not disconnect the USB flash drive from the projector while the settings are being written. If the USB flash drive is disconnected, the projector may not start correctly.

When writing completes normally, the projector turns off, and only the power indicator is lit blue.

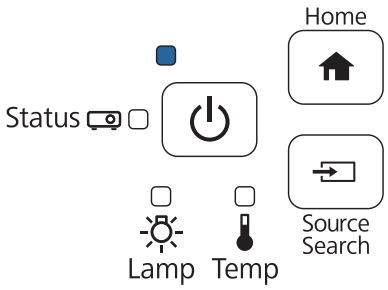


When the power turns off, remove the USB flash drive.

## Setup by Connecting the Computer and Projector with a USB Cable

The following operating systems support the batch setup function.

- Windows Vista and later
- Mac OS X 10.7.x and later

### Saving settings to a computer

1. Disconnect the power cord from the projector, and check that all of the projector's indicators have turned off

2. Connect the computer's USB port to the projector's USB-B port with a USB cable

3. While holding down the [Esc] button on the remote control or the control panel, connect the power cord to the projector

   The status indicator and the power indicator turn blue, and the lamp indicator and the temperature indicator turn orange.

   When all of the projector's indicators turn on, release the [Esc] button.

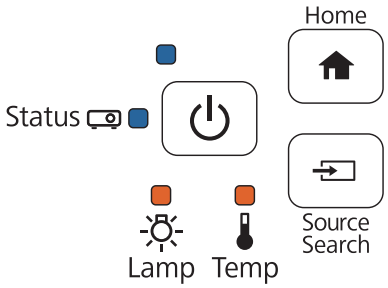


   The projector is recognized as a removable disk by the computer.

4. Open the removable disk, and save the batch setup file (PJCONFDATA.bin) to the computer

   If you need to change the name of the batch setup file, add text after PJCONFDATA. If you change the PJCONFDATA section of the file name, the projector may not be able to recognize the file correctly. You can only use single-byte characters for the file name.

5 Perform "Remove USB device" on your computer, and then disconnect the USB cable

When using OS X, perform "Remove EPSON_PJ".

The projector turns off and only the power indicator is lit blue.

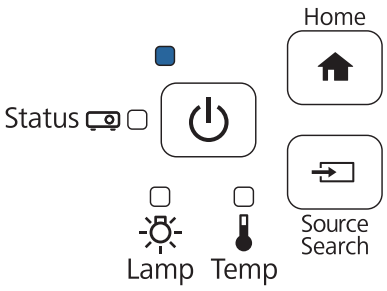

## Copying saved settings to other projectors

1. Disconnect the power cord from the projector, and check that all of the projector's indicators have turned off

2. Connect the computer's USB port to the projector's USB-B port with a USB cable

3. While holding down the [Menu] button on the remote control or the control panel, connect the power cord to the projector

   The status indicator and the power indicator turn blue, and the lamp indicator and the temperature indicator turn orange.

   When all of the projector's indicators turn on, release the [Menu] button.

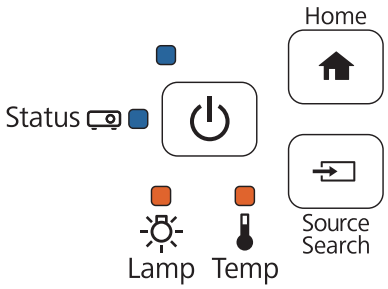


   The projector is recognized as a removable disk by the computer.

4. Copy the batch setup file (PJCONFDATA.bin) that you saved to your computer to the top-level folder of the removable disk

   Do not copy any files or folders other than the batch setup file to the removable disk.

**5** Perform "Remove USB device" on your computer, and then disconnect the USB cable

When using OS X, perform "Remove EPSON_PJ".

When all of the indicators start flashing, the settings are being written.

**Caution**

Do not disconnect the power cord from the projector while the settings are being written. If the power cord is disconnected, the projector may not start correctly.

When writing completes normally, the projector turns off, and only the power indicator is lit blue.

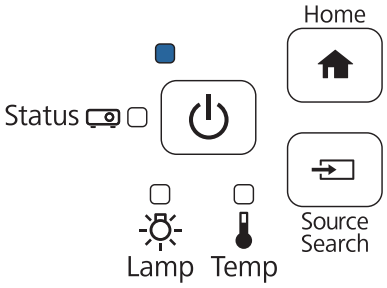


## When Setup Fails

| Check | Remedy |
|---|---|
| Are the lamp indicator and the temperature indicator flashing orange quickly? 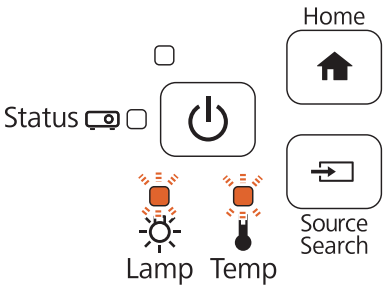  | The batch setup file may be corrupt, or the USB flash drive or USB cable may not be connected correctly. Disconnect the USB flash drive or the USB cable, unplug and then plug in the projector's power cord, and then try again. |
| Are the power indicator and the status indicator flashing blue quickly, and the lamp indicator and the temperature indicator flashing orange quickly? 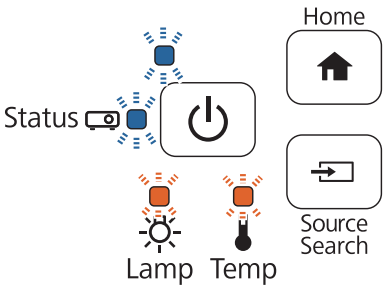  | Writing the settings may have failed and an error may have occurred in the projector's firmware. Stop using the projector, remove the power plug from the electrical outlet, and contact Epson for help. |

# Attaching a Security Cable

A commercially available theft-prevention wire lock can be attached to this product.

Pass the wire for the theft-prevention wire lock through the security cable installation points on the projector and the setting plate. See the user's guide supplied with the wire lock for locking instructions.

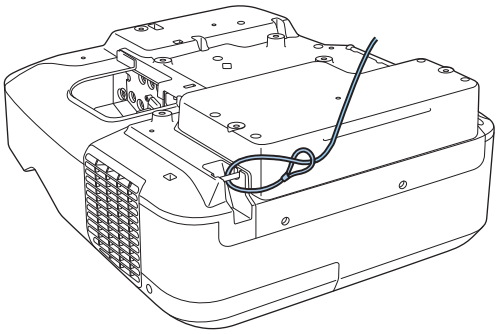

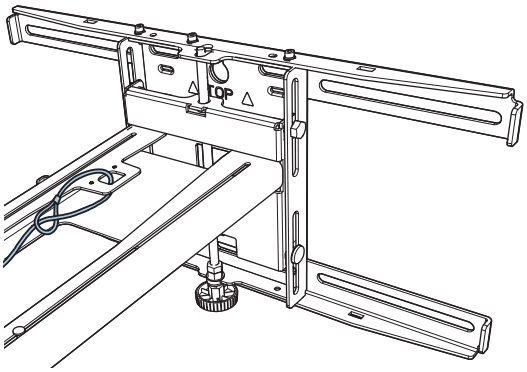


The security slot on this product is compatible with the Microsaver Security System manufactured by Kensington. See the following for more details on the Microsaver Security System.

http://www.kensington.com/

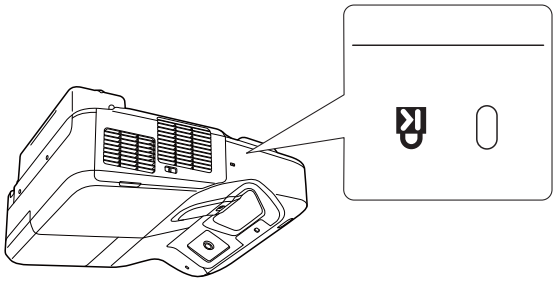

# General Notice

OS X is a trademark of Apple Inc.

Microsoft and Windows are trademarks or registered trademarks of Microsoft Corporation in the United States and/or other countries.

©SEIKO EPSON CORPORATION 2016. All rights reserved.